Low Duty LCD Segment Drivers

BU97960MUV MAX 120 segments (SEG15×COM8)

General Description

BU97960MUV is a 1/4 or 1/8 duty general-purpose LCD driver that can be used for consumer/battery operated products and can drive up to 120 LCD Segments.
It has integrated display RAM for reducing CPU load. Also, it is designed with low power consumption and no external component needed.
It can support LCD contrast adjustment by its EVR function.

Key Specifications

- Supply Voltage Range: +2.5V to +6.0V
- LCD Drive Power Supply Range: +2.5V to +6.0V
- Operating Temperature Range: -40°C to +85°C
- Max Segments: 120 Segments
- Display Duty and Bias:
  1/4 Duty and 1/3 Bias,
  1/8 Duty and 1/4 Bias selectable
- Interface: 2 wire serial interface

Features

- Integrated RAM for Display Data (DDRAM):
  15 x 8bit (Max 120 Segment)
- 1/8 or 1/4 can be Selected with The Serial Control Data.
  1/8 duty drive: Up to 120 Segments
  1/4 duty drive: Up to 76 Segments
- Integrated Buffer AMP for LCD Driving
- Integrated Oscillator Circuit
- No External Components
- Low Power Consumption Design
- Independent Power Supply for LCD Driving
- Integrated Electrical Volume Register (EVR) Function

Packages

W (Typ) x D (Typ) x H (Max)

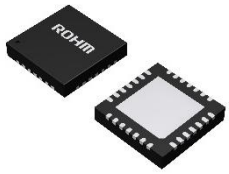

VQFN028V5050
5.00mm x 5.00mm x 1.00mm

Applications

- Metering
- Home Automation Goods
- White Goods, Small Appliances
- Healthcare Products
- Battery Operated Products

etc.

Typical Application Circuit

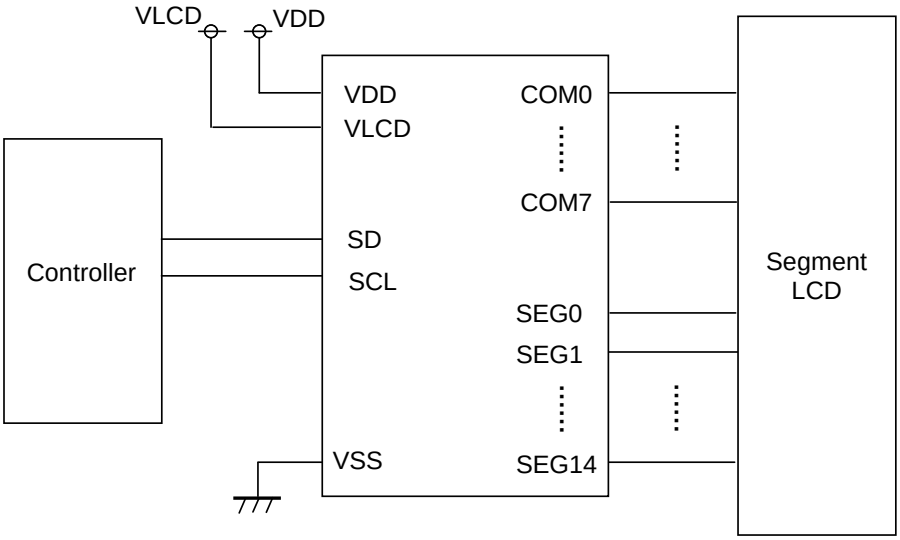

Figure 1. Typical Application Circuit

○Product structure：Silicon monolithic integrated circuit ○This product is not designed for protection against radioactive rays.

© 2018 ROHM Co., Ltd. All rights reserved.

Downloaded from Arrow.com.

Block Diagram / Pin Configuration

BU97960MUV (VQFN028V5050)

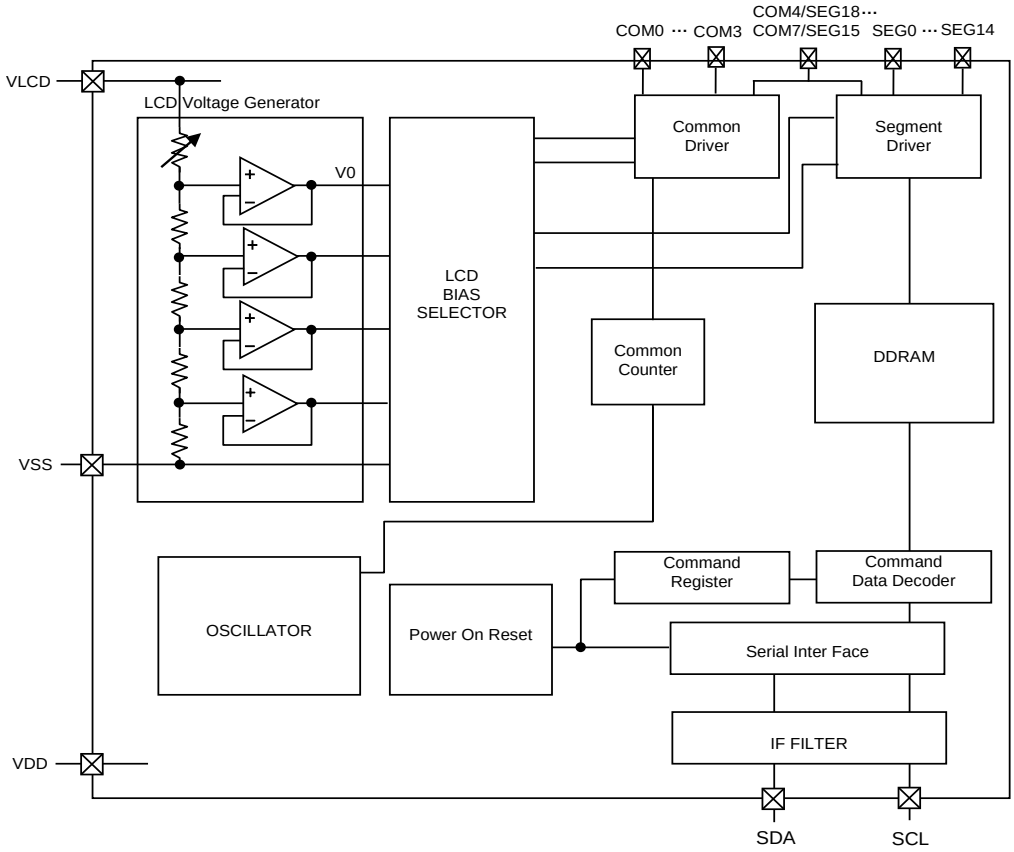

Figure 2. Block Diagram

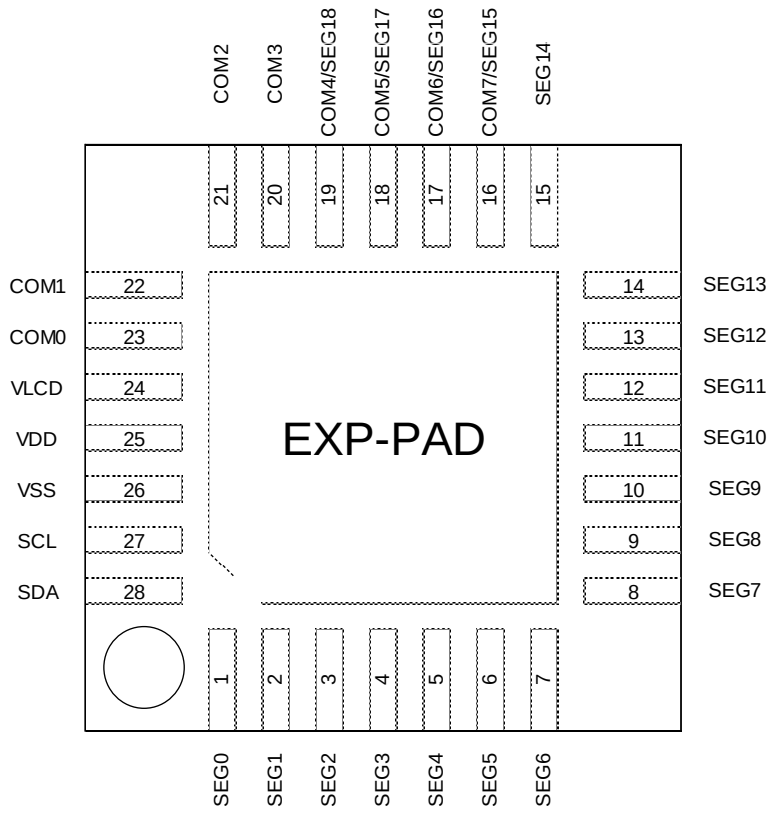

Figure 3. Pin Configuration (TOP VIEW)

© 2018 ROHM Co., Ltd. All rights reserved.

Downloaded from Arrow.com.

Pin Description

Table 1. Pin Description

Pin Name	Pin No.	I/O	Function	Handling when Unused
SDA	28	I/O	Serial data input	-
SCL	27	I	Serial data transfer clock	-
VSS	26	I	Power supply pin Must be connected to ground	-
VDD	25	I	Power supply	-
VLCD	24	I	Power supply pin for LCD driving.	-
SEG0 to SEG14	1 to 15	O	Segment output for LCD drive	OPEN
COM0 to COM3	23 to 20	O	Common output for LCD drive	OPEN
COM4/SEG18 to COM7/SEG15	19 to 16	O	Common/Segment output for LCD drive	OPEN
EXP-PAD	-	-	The EXP-PAD of the center of product connect to VSS or OPEN	OPEN/VSS

© 2018 ROHM Co., Ltd. All rights reserved.

Downloaded from Arrow.com.

Absolute Maximum Ratings (VSS=0V,Ta=25°C)

Parameter	Symbol	Ratings	Unit	Remarks
Power Supply Voltage1	VDD	-0.5 to +7.0	V	Power Supply
Power Supply Voltage2	VLCD	-0.5 to +7.0	V	Power supply pin for LCD driving
Power Dissipation	Pd	0.70(Note)	W	-
Input Voltage Range	V_{IN}	-0.5 to VDD+0.5	V	-
Storage Temperature Range	Tstg	-55 to +125	°C	-

(Note) Derate by 7.0mW/°C when operating above Ta=25°C (when mounted in ROHM's standard board)

Caution 1: *Operating the IC over the absolute maximum ratings may damage the IC. The damage can either be a short circuit between pins or an open circuit between pins and the internal circuitry. Therefore, it is important to consider circuit protection measures, such as adding a fuse, in case the IC is operated over the absolute maximum ratings.*

Caution 2: *Should by any chance the maximum junction temperature rating be exceeded the rise in temperature of the chip may result in deterioration of the properties of the chip. In case of exceeding this absolute maximum rating, design a PCB boards with power dissipation taken into consideration by increasing board size and copper area so as not to exceed the maximum junction temperature rating.*

Recommended Operating Conditions(VSS=0V)

Parameter	Symbol	Ratings			Unit	Remarks
		Min	Typ	Max		
Operational Temperature	Topr	-40	-	+85	°C	-
Power Supply Voltage1	VDD	2.5	-	6.0	V	Power Supply
Power Supply Voltage2	VLCD	2.5	-	6.0	V	LCD Drive Voltage

Electrical Characteristics

DC Characteristics

(VDD=2.5V to 6.0V, VLCD=2.5V to 6.0V, VSS=0V, Ta=-40°C to +85°C, unless otherwise specified)

Parameter		Symbol	Limits			Unit	Conditions
			Min	Typ	Max		
"H" Level Input Voltage		V_{IH}	0.7VDD	-	VDD	V	SDA, SCL
"L" Level Input Voltage		V_{IL}	VSS	-	0.3VDD	V	SDA, SCL
"H" Level Input Current		I_{IH}	-	-	1	μA	SDA, SCL
"L" Level Input Current		I_{IL}	-1	-	-	μA	SDA, SCL
LCD Driver on Resistance	SEG	R_{ON}	-	3.5	-	kΩ	I_{LOAD}=±10μA
	COM	R_{ON}	-	3.5	-	kΩ	
Standby Current		I_{ST}	-	-	5	μA	Display Off, Oscillation Off
Power Consumption 1		I_{DD}	-	2.5	15	μA	VDD=3.3V, VLCD=5V, Ta=25°C FR=80Hz, 1/4 Bias, Frame Inversion
Power Consumption 2		I_{LCD}	-	25	40	μA	VDD=3.3V, VLCD=5V, Ta=25°C FR=80Hz, 1/4 Bias, Frame Inversion

[Reference Data]
Condition: Ta=25°C, FR=80Hz, 1/4 Bias, Frame Inversion

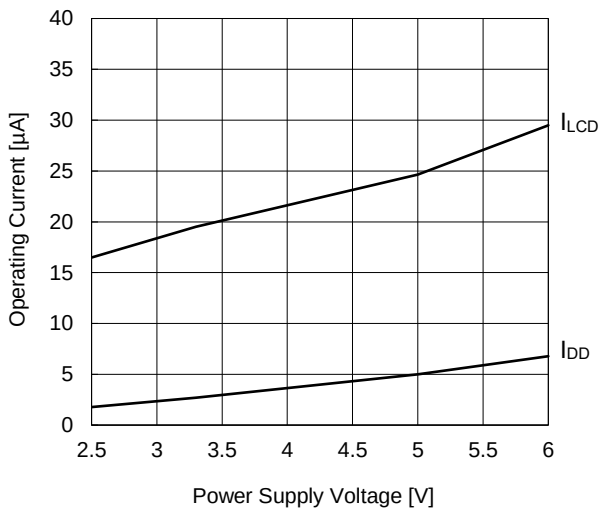

Figure 4. Power Consumption Typical Temperature Characteristics

© 2018 ROHM Co., Ltd. All rights reserved.

Downloaded from Arrow.com.

Electrical Characteristics – continued

Oscillation Characteristics

(VDD=2.5V to 6.0V, VLCD=2.5V to 6.0V, VSS=0V, Ta=-40°C to +85°C, unless otherwise specified)

Parameter	Symbol	Limits			Unit	Conditions
		Min	Typ	Max		
Frame Frequency 1	f_{CLK1}	56	80	104	Hz	FR=80Hz setting, VDD=2.5V to 6.0V, Ta=-40°C to +85°C
Frame Frequency 2	f_{CLK2}	72	80	88	Hz	FR=80Hz setting, VDD=3.3V, Ta=-40°C to +85°C

[Reference Data]

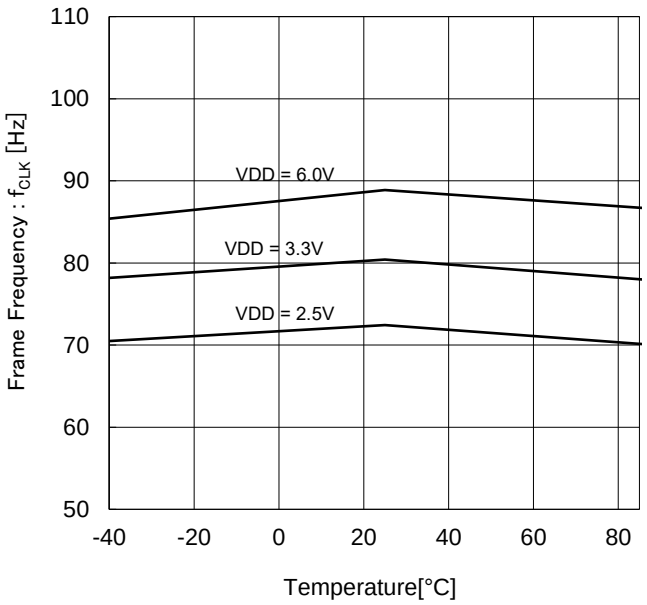

Figure 5. Frame Frequency Typical Temperature Characteristics

© 2018 ROHM Co., Ltd. All rights reserved.

Downloaded from Arrow.com.

Electrical Characteristics – continued

MPU Interface Characteristics

(VDD=2.5V to 6.0V, VLCD=2.5V to 6.0V, VSS=0V, Ta=-40°C to +85°C, unless otherwise specified)

Parameter	Symbol	Limits			Unit	Conditions
		Min	Typ	Max		
Input Rise Time	t_R	-	-	0.3	μs	-
Input Fall Time	t_F	-	-	0.3	μs	-
SCL Cycle Time	t_{SCYC}	2.5	-	-	μs	-
“H” SCL Pulse Width	t_{SHW}	0.6	-	-	μs	-
“L” SCL Pulse Width	t_{SLW}	1.3	-	-	μs	-
SDA Setup Time	t_{SDS}	100	-	-	ns	-
SDA Hold Time	t_{SDH}	100	-	-	ns	-
Bus Free Time	t_{BUF}	1.3	-	-	μs	-
START Condition Hold Time	$t_{HD;STA}$	0.6	-	-	μs	-
START Condition Setup Time	$t_{SU;STA}$	0.6	-	-	μs	-
STOP Condition Setup Time	$t_{SU;STO}$	0.6	-	-	μs	-

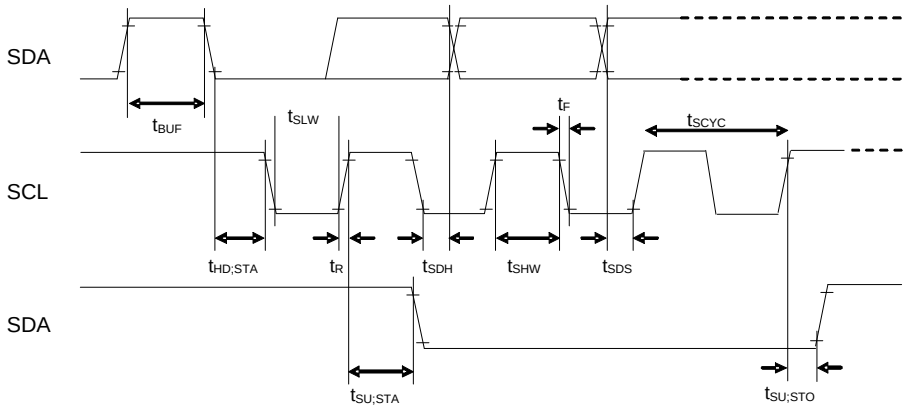

Figure 6. Interface Timing

© 2018 ROHM Co., Ltd. All rights reserved.

Downloaded from Arrow.com.

I/O Equivalent Circuit

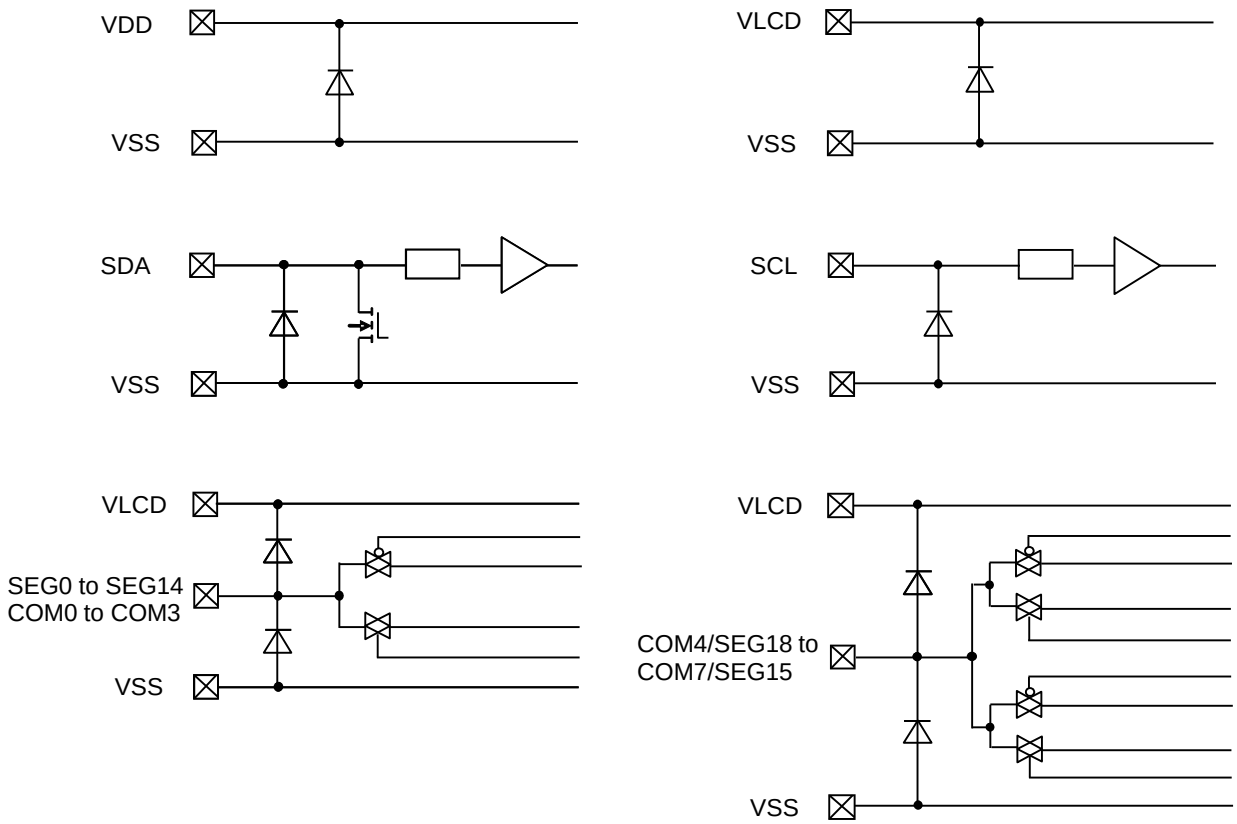

Figure 7. I/O Equivalent Circuit

© 2018 ROHM Co., Ltd. All rights reserved.

Downloaded from Arrow.com.

Function Description

Command/Data Transfer Method

BU97960MUV is transferred by 2 wire serial interface (SDA, SCL).

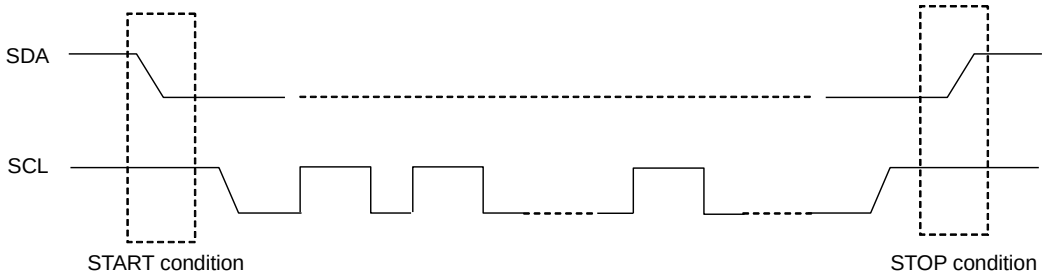

Figure 8. 2 wire serial interface Command/Data Transfer Format

It is necessary to generate START and STOP condition when sending Command or Display Data through this 2 wire serial interface.

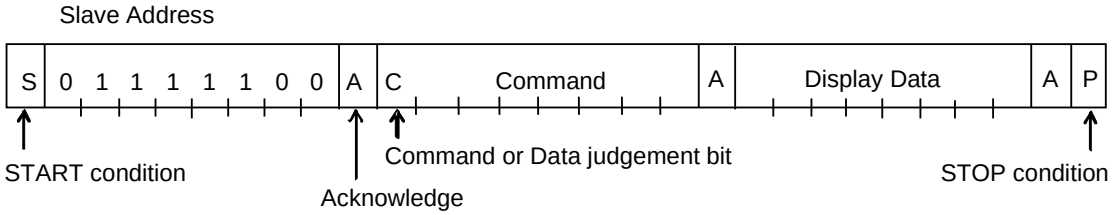

Figure 9. Interface Protocol

The following procedure shows how to transfer Command and Display Data.

(1) Generate “START condition”.
(2) Issue Slave Address.
(3) Transfer Command and Display Data.
(4) Generate “STOP condition

Acknowledge

Data format is comprised of 8 bits, Acknowledge bit is returned after sending 8-bit data.
After the transfer of 8-bit data (Slave Address, Command, Display Data), release the SDA line at the falling edge of the 8th clock SCL. The SDA line is pulled “Low” until the falling edge of the 9th clock SCL.
(Output cannot be pulled “High” because of open drain NMOS).
If acknowledge function is not required, keep SDA line at “Low” level from 8th falling edge to 9th falling edge of SCL.

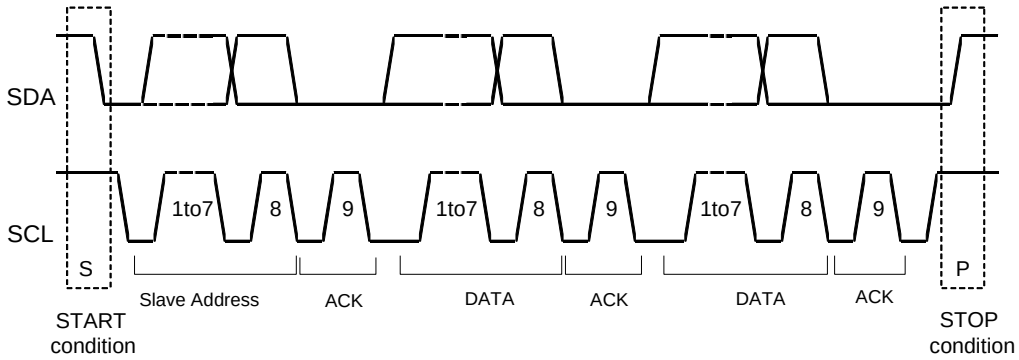

Figure 10. Acknowledge Timing

© 2018 ROHM Co., Ltd. All rights reserved.

Downloaded from Arrow.com.

Function Description – continued

Command Transfer Method

Issue Slave Address ("01111100") after generate "START condition".
The 1st byte after Slave Address always becomes command input.
MSB ("Command or Data judgement bit") of command decides next data is Command or Display Data.
When set "Command or Data judgement bit"="1", next byte will be command.
When set "Command or Data judgement bit"="0", next byte data is Display Data.

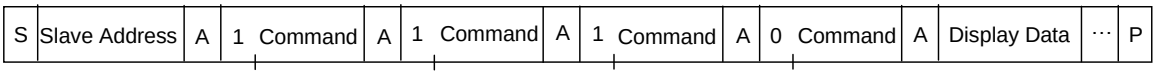

It cannot accept input command once it enters into Display Data transfer state.
In order to input command again, it is necessary to generate "START condition".
If "START condition" or "STOP condition" is sent in the middle of command transmission, the command will be cancelled.
If Slave Address is continuously sent following "START condition", it remains in command input state.
"Slave Address" must be sent right after the "START condition".
When Slave Address cannot be recognized in the first data transmission, no Acknowledge bit is generated and next transmission will be invalid. When the data is in invalid status, if "START condition" is transmitted again, it will return to valid status.

Consider the MPU interface characteristic such as Input rise time and Setup/Hold time when transferring command and data (Refer to MPU Interface Characteristics).

Write Display Data and Transfer Method

BU97960MUV enters "Write Mode" when Write Mode or Read Mode judgement bit of Slave Address is "0"
BU97960MUV has Display Data RAM (DDRAM) of 15×8=120bits.
The relationship between data input and Display Data, DDRAM data and the address are as follows.

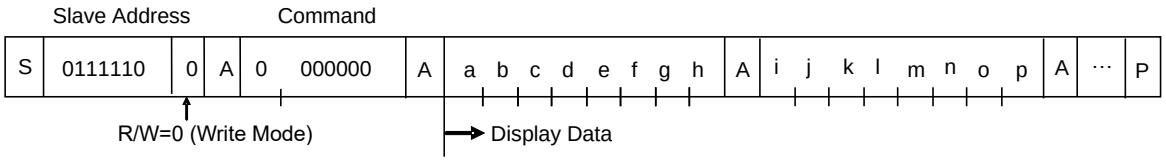

In 1/8 Duty Mode

8-bit data is stored in DDRAM. ADSET command specifies the address to be written, and address is automatically incremented in every 8-bit data.
Data can be continuously written in DDRAM by transmitting data continuously.

DDRAM Address

BIT	0h	1h	2h	3h	4h	5h	6h	7h	.....	Dh	Eh	
0	a	i										COM0
1	b	j										COM1
2	c	k										COM2
3	d	l										COM3
4	e	m										COM4
5	f	n										COM5
6	g	o										COM6
7	h	p										COM7
	SEG0	SEG1	SEG2	SEG3	SEG4	SEG5	SEG6	SEG7		SEG13	SEG14	

Display data is written to DDRAM every 8-bit data.
No need to wait for ACK bit to complete data transfer.

© 2018 ROHM Co., Ltd. All rights reserved.

Downloaded from Arrow.com.

Write Display and Transfer Method – continued

In 1/4 Duty Mode

4-bit data is stored in DDRAM. ADSET command specifies the address to be written, and address is automatically incremented in every 8-bit data.
Data can be continuously written in DDRAM by transmitting data continuously.

DDRAM Address

BIT	0h		1h		2h		3h		. . .	8h		9h	
0	a	e	i	m									COM0
1	b	f	j	n									COM1
2	c	g	k	o									COM2
3	d	H	l	p									COM3
	SEG0	SEG1	SEG2	SEG3	SEG4	SEG5	SEG6	SEG7		SEG16	SEG17	SEG18	

Display data is written to DDRAM every 4-bit data.
No need to wait for ACK bit to complete data transfer

© 2018 ROHM Co., Ltd. All rights reserved.

Downloaded from Arrow.com.

Function Description – continued

Register Read Command and Transfer Method

BU97960MUV enters “Read Mode” when R/W bit of Slave Address is “1”
During Read mode the command registers can be read.
The sequence for the command register read is shown below.

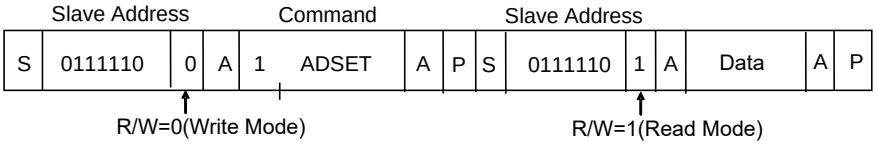

The following register settings can be read in this mode.
Only one register setting can be read at once, after reading register setting, BU97960MUV will exit from read mode and wait for slave Address. If all register setting needs to be read, make sequence for “REG1” and “REG2”, respectively.

Register	D7	D6	D5	D4	D3	D2	D1	D0	Address
REG1	P7	P6	P5	P4	P3	P2	P1	P0	0Fh
REG2	P7	P6	1	0	P3	P2	P1	P0	10h

REG1:P7 = Frame Frequency setting
P6 = Duty and Bias setting
P5 = Software Reset condition
P4 to P0 = EVR setting

REG2: P7 to P6 = Frame Frequency (FR) setting
P3 = LCD drive waveform setting
P2 = Display ON / OFF setting
P1 = APON setting
P0 = APOFF setting

An example of the command register read sequence is shown below.

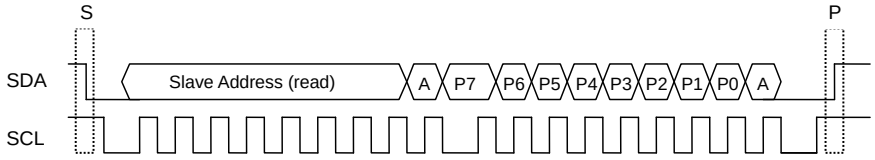

LCD Driver Bias Circuit

BU97960MUV generates LCD driving voltage with on-chip Buffer AMP.
And it can drive LCD at low power consumption.
1/4 or 1/3 Bias can be set by MODESET command.
Line or frame inversion can be set by DISCTL command.
Refer to the “LCD Driving Waveform” for each LCD Bias setting.

Reset Initialize Condition

Initial condition after executing Software Reset is as follows.
-Display is off.
-DDRAM address is initialized (DDRAM Data is not initialized).
Refer to Detailed Command Description for initialize value of registers.

© 2018 ROHM Co., Ltd. All rights reserved.

Downloaded from Arrow.com.

Function Description – continued

Command/Function List

Description List of Command/Function

No.	Command	Function
1	Address Set (ADSET)	DDRAM Address setting (00h to 0Eh) Command register address setting (0Fh, 10h)
2	EVR Set (EVRSET)	EVR setting (0 to 31)
3	Display Control (DISCTL)	Frame Frequency, Power Save Mode setting
4	IC Operation Set (ICSET)	LCD drive mode, Software Reset, Display On/Off setting
5	All Pixel Control (APCTL)	All pixel On/Off setting
6	Mode Set (MODESET)	Frame Frequency, Duty and Bias setting

Detailed Command Description

D7 (MSB) is a Command or Data judgment bit.
Refer to Command/Data Transfer Method.

C: 0: Next byte is RAM write data.
1: Next byte is command.

Address Set (ADSET)

MSB D7	D6	D5	D4	D3	D2	D1	LSB D0
C	0	P5	P4	P3	P2	P1	P0

Address data is specified in P[5:0].

The address range can be set as 00h(000000b) to 0Eh(001110b) for Write mode.
When the specified address is out of range, the address will be set to “00h(000000b)”.
The default value of the DDRAM Address is “00h(000000b)”

The address can be set 0Fh(001111b) and 10h(010000b) for Read mode.
It is prohibited to set other address.

P[5:0] = 0Fh(001111b) : REG1
Register address for Software Reset condition and EVR setting

P[5:0] = 10h(010000b) : REG2
Register address for the other settings
(For more detailed information, refer to “Register Read Command and Transfer Method”)

EVR Set (EVRSET)

MSB D7	D6	D5	D4	D3	D2	D1	LSB D0
C	1	0	P4	P3	P2	P1	P0

BU97960MUV has 32-step Electrical Volume Register (EVR) that can set the best V0 voltage level (Maximum LCD driving voltage).
Electrical Volume Register (EVR) is set to “00000” in reset initialize condition.
In “00000” condition, VLCD voltage is equal to V0 voltage.
Refer to the below table for V0 voltage in next page.
Prohibited setting V0 voltage less than 2.5V.
And ensure “VLCD – V0 > 0.6” condition is satisfied.
Unstable IC output voltage may result if the above conditions are not satisfied.

© 2018 ROHM Co., Ltd. All rights reserved.

Downloaded from Arrow.com.

EVR Set (EVRSET) – continued

The relationship between electrical volume register (EVR) setting and V0 voltage

EVR	Calculation Formula	VLCD = 6.000	VLCD = 5.500	VLCD = 5.000	VLCD = 4.000	VLCD = 3.500	VLCD = 3.000	VLCD = 2.500	Unit
0	VLCD	V0= 6.000	V0= 5.500	V0= 5.000	V0= 4.000	V0= 3.500	V0= 3.000	V0= 2.500	V
1	0.967*VLCD	V0= 5.802	V0= 5.323	V0= 4.839	V0= 3.871	V0= 3.387	V0= 2.903	V0= 2.419	V
2	0.937*VLCD	V0= 5.622	V0= 5.156	V0= 4.688	V0= 3.750	V0= 3.281	V0= 2.813	V0= 2.344	V
3	0.909*VLCD	V0= 5.454	V0= 5.000	V0= 4.545	V0= 3.636	V0= 3.182	V0= 2.727	V0= 2.273	V
4	0.882*VLCD	V0= 5.292	V0= 4.853	V0= 4.412	V0= 3.529	V0= 3.088	V0= 2.647	V0= 2.206	V
5	0.857*VLCD	V0= 5.142	V0= 4.714	V0= 4.286	V0= 3.429	V0= 3.000	V0= 2.571	V0= 2.143	V
6	0.833*VLCD	V0= 4.998	V0= 4.583	V0= 4.167	V0= 3.333	V0= 2.917	V0= 2.500	V0= 2.083	V
7	0.810*VLCD	V0= 4.860	V0= 4.459	V0= 4.054	V0= 3.243	V0= 2.838	V0= 2.432	V0= 2.027	V
8	0.789*VLCD	V0= 4.734	V0= 4.342	V0= 3.947	V0= 3.158	V0= 2.763	V0= 2.368	V0= 1.974	V
9	0.769*VLCD	V0= 4.614	V0= 4.231	V0= 3.846	V0= 3.077	V0= 2.692	V0= 2.308	V0= 1.923	V
10	0.750*VLCD	V0= 4.500	V0= 4.125	V0= 3.750	V0= 3.000	V0= 2.625	V0= 2.250	V0= 1.875	V
11	0.731*VLCD	V0= 4.386	V0= 4.024	V0= 3.659	V0= 2.927	V0= 2.561	V0= 2.195	V0= 1.829	V
12	0.714*VLCD	V0= 4.284	V0= 3.929	V0= 3.571	V0= 2.857	V0= 2.500	V0= 2.143	V0= 1.786	V
13	0.697*VLCD	V0= 4.182	V0= 3.837	V0= 3.488	V0= 2.791	V0= 2.442	V0= 2.093	V0= 1.744	V
14	0.681*VLCD	V0= 4.086	V0= 3.750	V0= 3.409	V0= 2.727	V0= 2.386	V0= 2.045	V0= 1.705	V
15	0.666*VLCD	V0= 3.996	V0= 3.667	V0= 3.333	V0= 2.667	V0= 2.333	V0= 2.000	V0= 1.667	V
16	0.652*VLCD	V0= 3.912	V0= 3.587	V0= 3.261	V0= 2.609	V0= 2.283	V0= 1.957	V0= 1.630	V
17	0.638*VLCD	V0= 3.828	V0= 3.511	V0= 3.191	V0= 2.553	V0= 2.234	V0= 1.915	V0= 1.596	V
18	0.625*VLCD	V0= 3.750	V0= 3.438	V0= 3.125	V0= 2.500	V0= 2.188	V0= 1.875	V0= 1.563	V
19	0.612*VLCD	V0= 3.672	V0= 3.367	V0= 3.061	V0= 2.449	V0= 2.143	V0= 1.837	V0= 1.531	V
20	0.600*VLCD	V0= 3.600	V0= 3.300	V0= 3.000	V0= 2.400	V0= 2.100	V0= 1.800	V0= 1.500	V
21	0.588*VLCD	V0= 3.528	V0= 3.235	V0= 2.941	V0= 2.353	V0= 2.059	V0= 1.765	V0= 1.471	V
22	0.576*VLCD	V0= 3.456	V0= 3.173	V0= 2.885	V0= 2.308	V0= 2.019	V0= 1.731	V0= 1.442	V
23	0.566*VLCD	V0= 3.396	V0= 3.113	V0= 2.830	V0= 2.264	V0= 1.981	V0= 1.698	V0= 1.415	V
24	0.555*VLCD	V0= 3.330	V0= 3.056	V0= 2.778	V0= 2.222	V0= 1.944	V0= 1.667	V0= 1.389	V
25	0.545*VLCD	V0= 3.270	V0= 3.000	V0= 2.727	V0= 2.182	V0= 1.909	V0= 1.636	V0= 1.364	V
26	0.535*VLCD	V0= 3.210	V0= 2.946	V0= 2.679	V0= 2.143	V0= 1.875	V0= 1.607	V0= 1.339	V
27	0.526*VLCD	V0= 3.156	V0= 2.895	V0= 2.632	V0= 2.105	V0= 1.842	V0= 1.579	V0= 1.316	V
28	0.517*VLCD	V0= 3.102	V0= 2.845	V0= 2.586	V0= 2.069	V0= 1.810	V0= 1.552	V0= 1.293	V
29	0.508*VLCD	V0= 3.048	V0= 2.797	V0= 2.542	V0= 2.034	V0= 1.780	V0= 1.525	V0= 1.271	V
30	0.500*VLCD	V0= 3.000	V0= 2.750	V0= 2.500	V0= 2.000	V0= 1.750	V0= 1.500	V0= 1.250	V
31	0.491*VLCD	V0= 2.946	V0= 2.705	V0= 2.459	V0= 1.967	V0= 1.721	V0= 1.475	V0= 1.230	V

Prohibited setting

© 2018 ROHM Co., Ltd. All rights reserved.

Downloaded from Arrow.com.

Detailed Command Description – continued

Display Control (DISCTL)

MSB D7	D6	D5	D4	D3	D2	D1	LSB D0
C	1	1	0	P3	P2	1	0

Set Frame Frequency

Setting	P3	P2	FRSEL	Reset Initialize Condition
80Hz	0	0	0	○
71Hz	0	1	0	-
64Hz	1	0	0	-
50Hz	1	1	0	-
233Hz	0	0	1	-
197Hz	0	1	1	-
160Hz	1	0	1	-
122Hz	1	1	1	-

The frame frequency varies according to the characteristics of f_{CLK} when internal oscillation circuit is used.
(Refer to Oscillation Characteristics for f_{CLK} properties).
Refer to MODESET for FRSEL

© 2018 ROHM Co., Ltd. All rights reserved.

Downloaded from Arrow.com.

Detailed Command Description – continued

Set IC Operation (ICSET)

MSB D7	D6	D5	D4	D3	D2	D1	LSB D0
C	1	1	1	0	P2	P1	P0

Set LCD Drive Waveform

Setup	P2	Reset Initialize Condition
Line Inversion Mode	0	-
Frame Inversion Mode	1	○

Power consumption is reduced in the following order:
Line Inversion > Frame Inversion
Typically, when driving large capacitance LCD, Line inversion is more susceptible to crosstalk.
Regarding driving waveform, refer to LCD Driving Waveform.

Set Software Reset Execution

Setup	P1	Reset Initialize Condition
Software Reset Not Execute	0	○
Software Reset Execute	1	-

When "Software Reset" is executed, BU97960MUV is reset to initial condition.
Don't set Software Reset (P1) with P2, P0 at the same time.

Set Display On and Off

Setup	P0	Reset Initialize Condition
Display Off(DISPOFF)	0	○
Display On(DISPON)	1	-

Display Off: Regardless of DDRAM data, all Segment and Common output will be stopped after 1frame of OFF data write. Display Off mode will be disabled after Display On command.
Display On: Segment and Common output will be active and start to read the Display Data from DDRAM.

After receiving the Display ON setting, BU97960MUV completes startup in one frame and starts displaying. If the Display OFF setting is received within one frame after receiving the Display ON setting, the state during startup is maintained and the abnormal current is generated. If you send the Display OFF setting after sending the Display ON setting, leave an interval of 1 frame or more.

All Pixel Control (APCTL)

MSB D7	D6	D5	D4	D3	D2	D1	LSB D0
C	1	1	1	1	0	P1	P0

All Display Set On and Off

Setup	P1	Reset Initialize Condition
Normal	0	○
All Pixel On(APON)	1	-

Setup	P0	Reset Initialize Condition
Normal	0	○
All Pixel Off(APOFF)	1	-

All Pixels On: All pixels are on regardless of DDRAM data.
All Pixels Off: All pixels are off regardless of DDRAM data.

This command is valid in Display on status. The data of DDRAM is not changed by this command.
If set both P1 and P0 ="1", All pixels off will be selected.

© 2018 ROHM Co., Ltd. All rights reserved.

Downloaded from Arrow.com.

Detailed Command Description – continued

Mode Set (MODESET)

MSB D7	D6	D5	D4	D3	D2	D1	LSB D0
C	1	1	1	1	1	P1	P0

Set Frame Frequency Setting

Setup	P1	Reset initialize condition
Normal	0	○
200Hz Mode	1	-

Set Duty and Bias Level

Setup	P0	Reset initialize condition
1/8 Duty and 1/4 Bias	0	○
1/4 Duty and 1/3 Bias	1	-

Refer to LCD Driving Waveform.

© 2018 ROHM Co., Ltd. All rights reserved.

Downloaded from Arrow.com.

LCD Driving Waveform

Line Inversion Mode (1/8 Duty, 1/4 Bias)

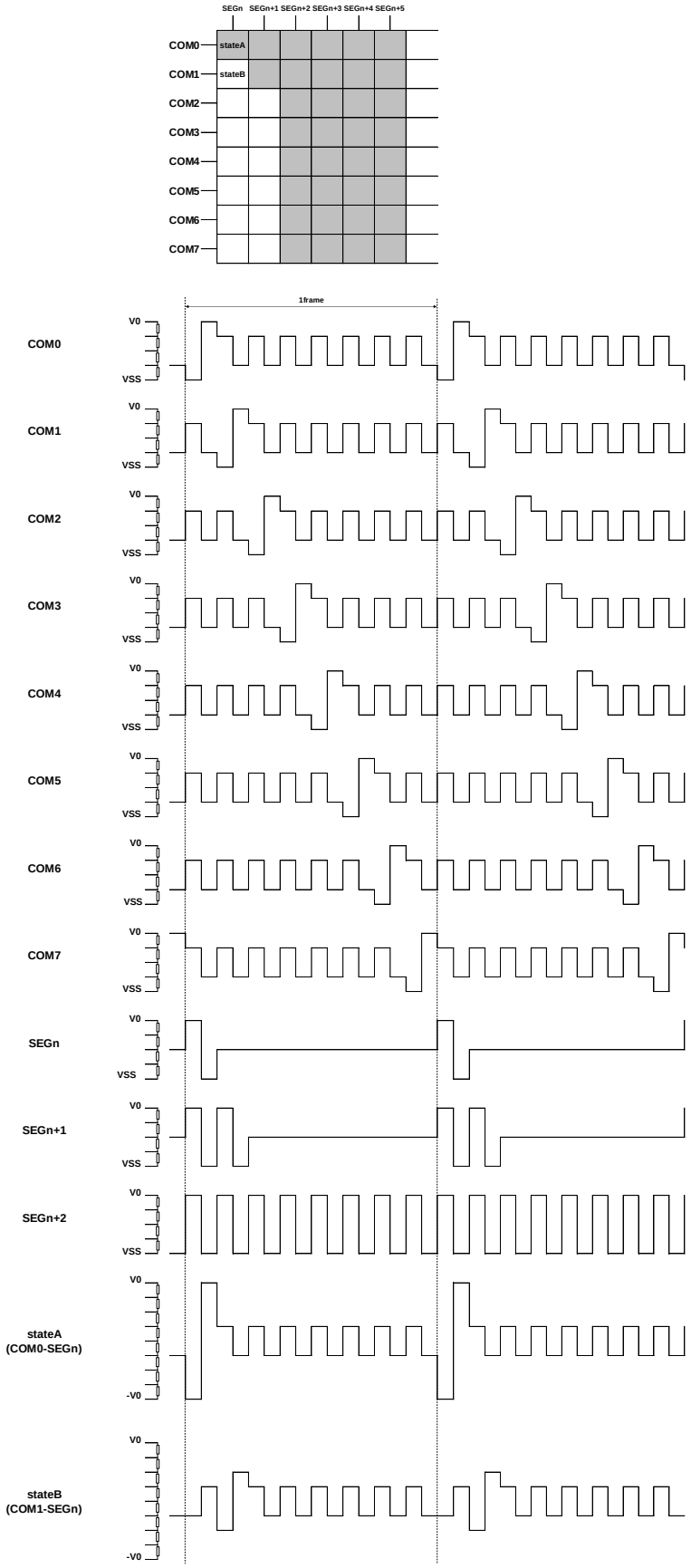

Figure 11. Wave Form of Line Inversion

© 2018 ROHM Co., Ltd. All rights reserved.

Downloaded from Arrow.com.

LCD Driving Waveform – continued

Frame Inversion Mode (1/8 Duty, 1/4 Bias)

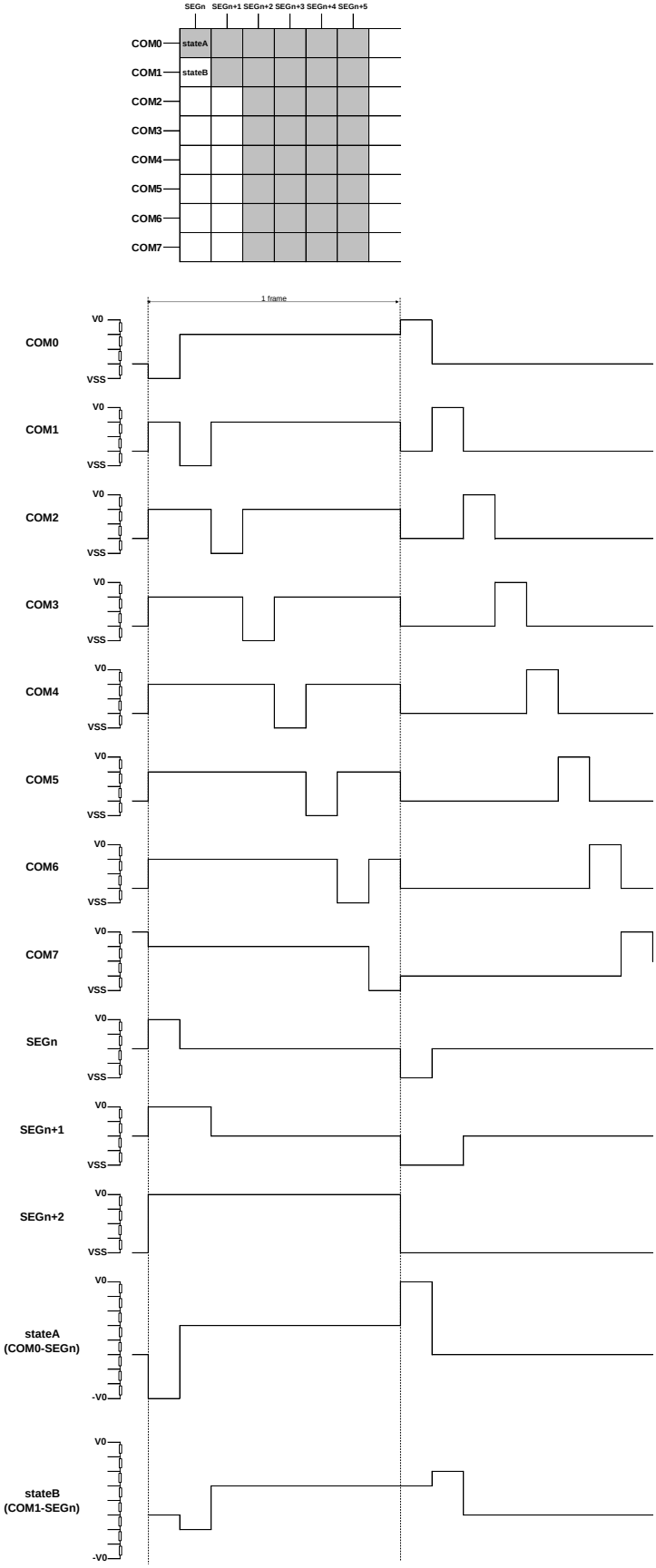

Figure 12. Wave Form of Frame Inversion

© 2018 ROHM Co., Ltd. All rights reserved.

Downloaded from Arrow.com.

LCD Driving Waveform – continued

Line Inversion Mode (1/4 Duty, 1/3 Bias)

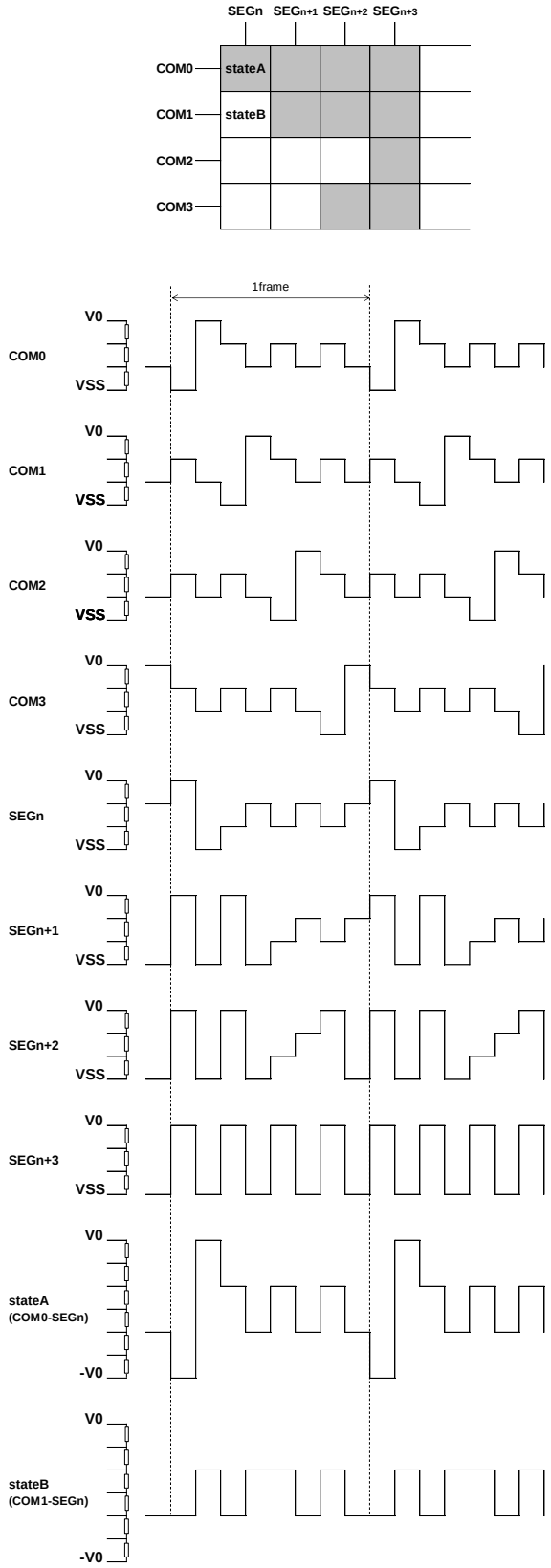

Figure 13. Wave Form of Frame Inversion

© 2018 ROHM Co., Ltd. All rights reserved.

Downloaded from Arrow.com.

LCD Driving Waveform – continued

Frame Inversion Mode (1/4 Duty, 1/3 Bias)

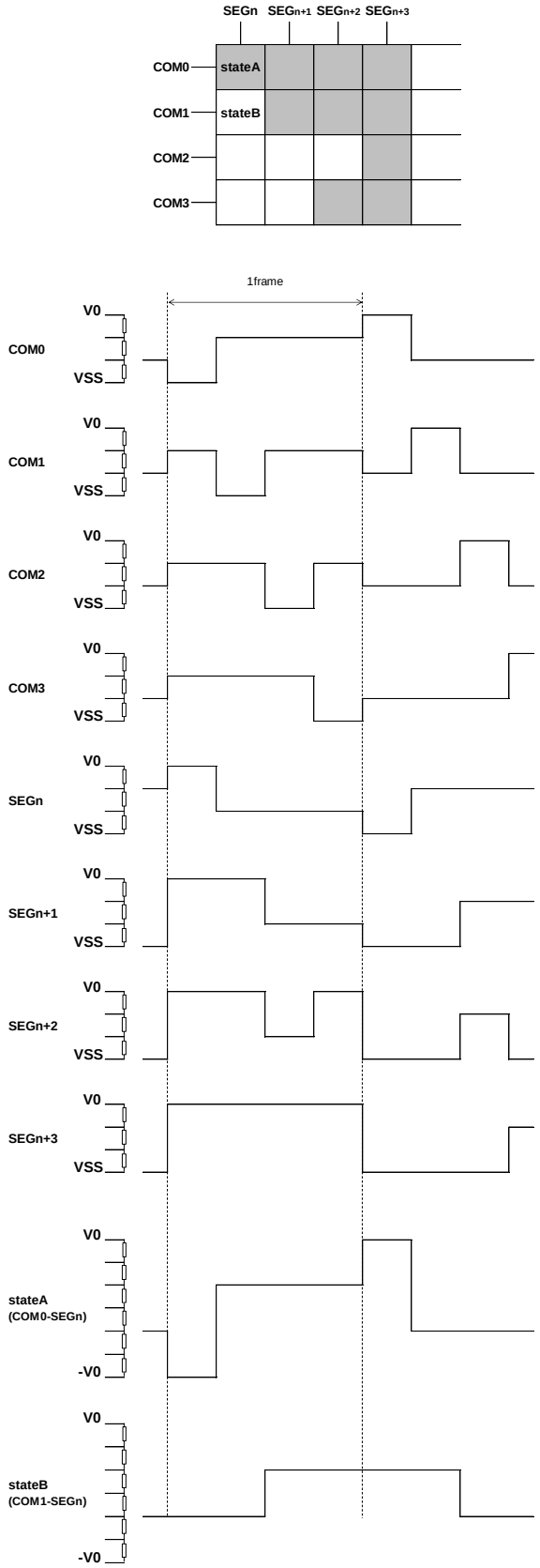

Figure 14. Wave Form of Frame Inversion

© 2018 ROHM Co., Ltd. All rights reserved.

Downloaded from Arrow.com.

Initialize Sequence

Follow the Power-on sequence below to initialize condition.

Power on
↓
STOP condition
↓
START condition
↓
Issue Slave Address
↓
Execute Software Reset by ICSET command

After Power-on and before sending initialize sequence, each register value, DDRAM Address and DDRAM Data are random.

Start Sequence

Start Sequence Example

No.	Input	D7	D6	D5	D4	D3	D2	D1	D0	Descriptions
1	Power on									VDD=0V to 5V (t_R=0.1ms)
	↓									
2	Wait 100µs (Min)									Initialize IC
	↓									
3	STOP									STOP condition
	↓									
4	START									START condition
5	Slave Address	0	1	1	1	1	1	0	0	Issue Slave Address
	↓									
6	ICSET	1	1	1	1	0	*	1	*	Execute Software Reset
	↓									
7	DISCTL	1	1	1	0	0	0	1	0	
	↓									
8	EVRSET	1	1	0	0	0	0	0	0	
	↓									
9	ADSET	0	0	0	0	0	0	0	0	DDRAM Address set
	↓									
10	Display Data	*	*	*	*	*	*	*	*	Address 00h
	⋮									⋮
	Display Data	*	*	*	*	*	*	*	*	Address 0Eh
	↓									
11	STOP									STOP condition
	↓									
12	START									START condition
13	Slave Address	0	1	1	1	1	1	0	0	Issue Slave Address
	↓									
14	ICSET	1	1	1	1	0	*	0	1	Display On
	↓									
15	STOP									STOP condition

(*:Don't care)

© 2018 ROHM Co., Ltd. All rights reserved.

Downloaded from Arrow.com.

Cautions in Power ON/OFF

To prevent incorrect display, malfunction and abnormal current, follow Power On/Off sequence shown in waveform below.
VDD must be turned on before VLCD during power up sequence.
VDD must be turned off after VLCD during power down sequence.
Set t_1>0ns and t_2>0ns.
To refrain from data transmission is strongly recommended while power supply is rising up or falling down to prevent from the occurrence of disturbances on transmission and reception.

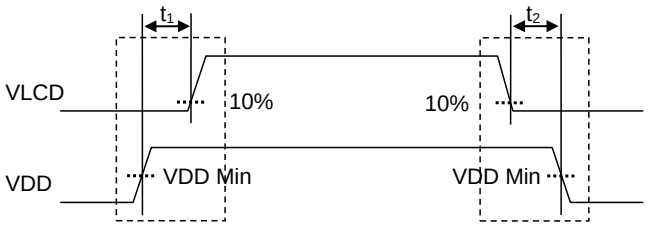

Figure 15. Power ON/OFF Waveform

© 2018 ROHM Co., Ltd. All rights reserved.

Downloaded from Arrow.com.

Caution in POR Circuit Use

BU97960MUV has “POR” (Power-On Reset) circuit and Software Reset function.
Keep the following recommended Power-On conditions in order to power up properly.

Set power up conditions to meet the recommended t_R, t_F, t_{OFF}, and V_{BOT} specification below in order to ensure P.O.R operation.

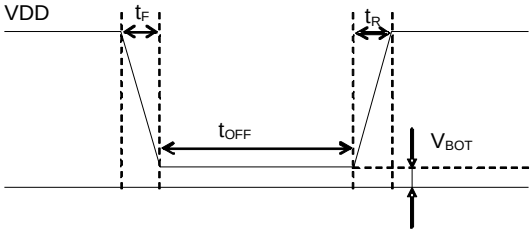

Figure 16. Power ON/OFF Waveform

Recommended condition of t_R, t_F, t_{OFF}, V_{BOT} (Ta=25 °C)

t_R	t_F	t_{OFF}	V_{BOT}
Less than 5ms	Less than 5ms	More than 20ms	Less than 0.3V

When it is difficult to keep above conditions, it is possibility to cause meaning less display due to no IC initialization.
Execute the IC initialization as quickly as possible after Power-on to reduce such influence.
See the IC initialization flow as below.
However, note that it cannot accept command while supply is unstable or below the minimum supply range.
Note also that Software Reset is not a complete alternative to POR function.

1. Generate STOP condition

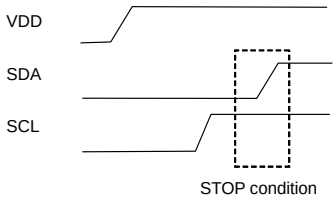

Figure 17. STOP Condition

2 Generate START condition.

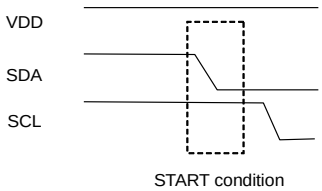

Figure 18. START Condition

3. Issue Slave Address.

4. Execute Software Reset (ICSET) command.

© 2018 ROHM Co., Ltd. All rights reserved.

Downloaded from Arrow.com.

Note on the Multiple Devices be Connected to 2 Wire Interface

Do not access the other device without power supply (VDD) to the BU97960MUV.

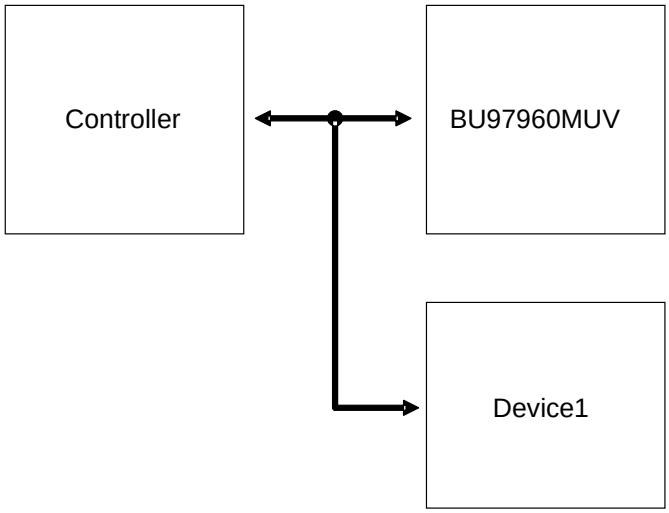

Figure 19. Example of BUS Connection

To control the slope of the falling edge, a capacitor is connected between gate and drain of a NMOS transistor (Refer to Figure. 20).
The gate is in a high-impedance state if the power supply (VDD) is not supplied.

In this condition, the gate voltage is pulled up by the current flow through the capacitance as a result of the SDA signal's transition from LOW to HIGH.

The NMOS transistor turns on and draws some current (Ids) from the SDA port if the gate voltage (Vg) is higher than the threshold voltage (Vth).

An external resistor (R) is connected between the power line and SDA line to keep the SDA line as logic HIGH.
But the line cannot be kept as logic HGH if the voltage drop (R*Ids) is large.

Access the other LSIs with power supply to BU97960MUV to control the gate voltage as logic level of 1 or 0 if the number of LSIs are connected to the same bus.

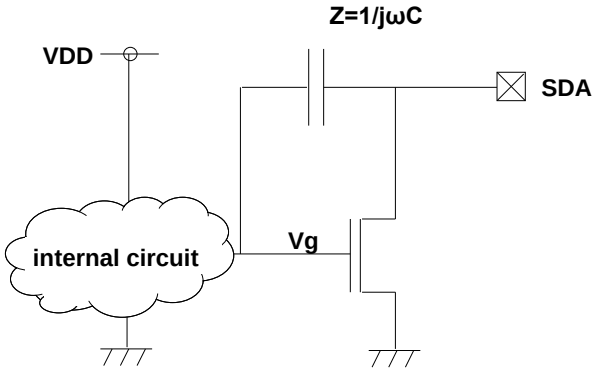

Figure 20. SDA output cell structure

© 2018 ROHM Co., Ltd. All rights reserved.

Downloaded from Arrow.com.

Operational Notes

1. **Reverse Connection of Power Supply**
   Connecting the power supply in reverse polarity can damage the IC. Take precautions against reverse polarity when connecting the power supply, such as mounting an external diode between the power supply and the IC's power supply pins.

2. **Power Supply Lines**
   Design the PCB layout pattern to provide low impedance supply lines. Separate the ground and supply lines of the digital and analog blocks to prevent noise in the ground and supply lines of the digital block from affecting the analog block. Furthermore, connect a capacitor to ground at all power supply pins. Consider the effect of temperature and aging on the capacitance value when using electrolytic capacitors.

3. **Ground Voltage**
   Ensure that no pins are at a voltage below that of the ground pin at any time, even during transient condition.

4. **Ground Wiring Pattern**
   When using both small-signal and large-current ground traces, the two ground traces should be routed separately but connected to a single ground at the reference point of the application board to avoid fluctuations in the small-signal ground caused by large currents. Also ensure that the ground traces of external components do not cause variations on the ground voltage. The ground lines must be as short and thick as possible to reduce line impedance.

5. **Recommended Operating Conditions**
   The function and operation of the IC are guaranteed within the range specified by the recommended operating conditions. The characteristic values are guaranteed only under the conditions of each item specified by the electrical characteristics.

6. **Inrush Current**
   When power is first supplied to the IC, it is possible that the internal logic may be unstable and inrush current may flow instantaneously due to the internal powering sequence and delays, especially if the IC has more than one power supply. Therefore, give special consideration to power coupling capacitance, power wiring, width of ground wiring, and routing of connections.

7. **Operation Under Strong Electromagnetic Field**
   Operating the IC in the presence of a strong electromagnetic field may cause the IC to malfunction.

8. **Testing on Application Boards**
   When testing the IC on an application board, connecting a capacitor directly to a low-impedance output pin may subject the IC to stress. Always discharge capacitors completely after each process or step. The IC's power supply should always be turned off completely before connecting or removing it from the test setup during the inspection process. To prevent damage from static discharge, ground the IC during assembly and use similar precautions during transport and storage.

9. **Inter-pin Short and Mounting Errors**
   Ensure that the direction and position are correct when mounting the IC on the PCB. Incorrect mounting may result in damaging the IC. Avoid nearby pins being shorted to each other especially to ground, power supply and output pin. Inter-pin shorts could be due to many reasons such as metal particles, water droplets (in very humid environment) and unintentional solder bridge deposited in between pins during assembly to name a few.

© 2018 ROHM Co., Ltd. All rights reserved.

Downloaded from Arrow.com.

Operational Notes – continued

10. Unused Input Pins

Input pins of an IC are often connected to the gate of a MOS transistor. The gate has extremely high impedance and extremely low capacitance. If left unconnected, the electric field from the outside can easily charge it. The small charge acquired in this way is enough to produce a significant effect on the conduction through the transistor and cause unexpected operation of the IC. So unless otherwise specified, unused input pins should be connected to the power supply or ground line.

11. Regarding the Input Pin of the IC

In the construction of this IC, P-N junctions are inevitably formed creating parasitic diodes or transistors. The operation of these parasitic elements can result in mutual interference among circuits, operational faults, or physical damage. Therefore, conditions which cause these parasitic elements to operate, such as applying a voltage to an input pin lower than the ground voltage should be avoided. Furthermore, do not apply a voltage to the input pins when no power supply voltage is applied to the IC. Even if the power supply voltage is applied, make sure that the input pins have voltages within the values specified in the electrical characteristics of this IC.

12. Ceramic Capacitor

When using a ceramic capacitor, determine a capacitance value considering the change of capacitance with temperature and the decrease in nominal capacitance due to DC bias and others.

© 2018 ROHM Co., Ltd. All rights reserved.

Downloaded from Arrow.com.

Ordering Information

B	U	9	7	9	6	0	M	U	V	-	E2

Part Number

Package
MUV : VQFN028V5050

Packaging and forming specification
E2: Embossed tape and reel

Marking Diagram

VQFN028V5050 (TOPVIEW)

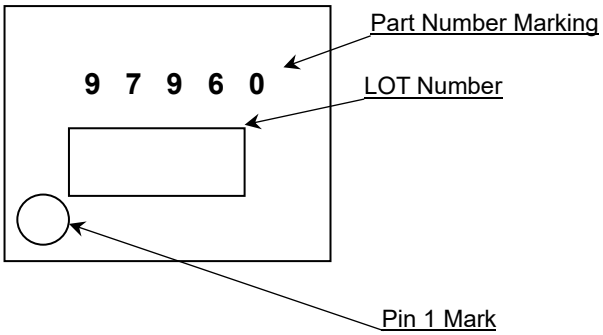

© 2018 ROHM Co., Ltd. All rights reserved.

Downloaded from Arrow.com.

Physical Dimension and Packing Information

Package Name	VQFN028V5050

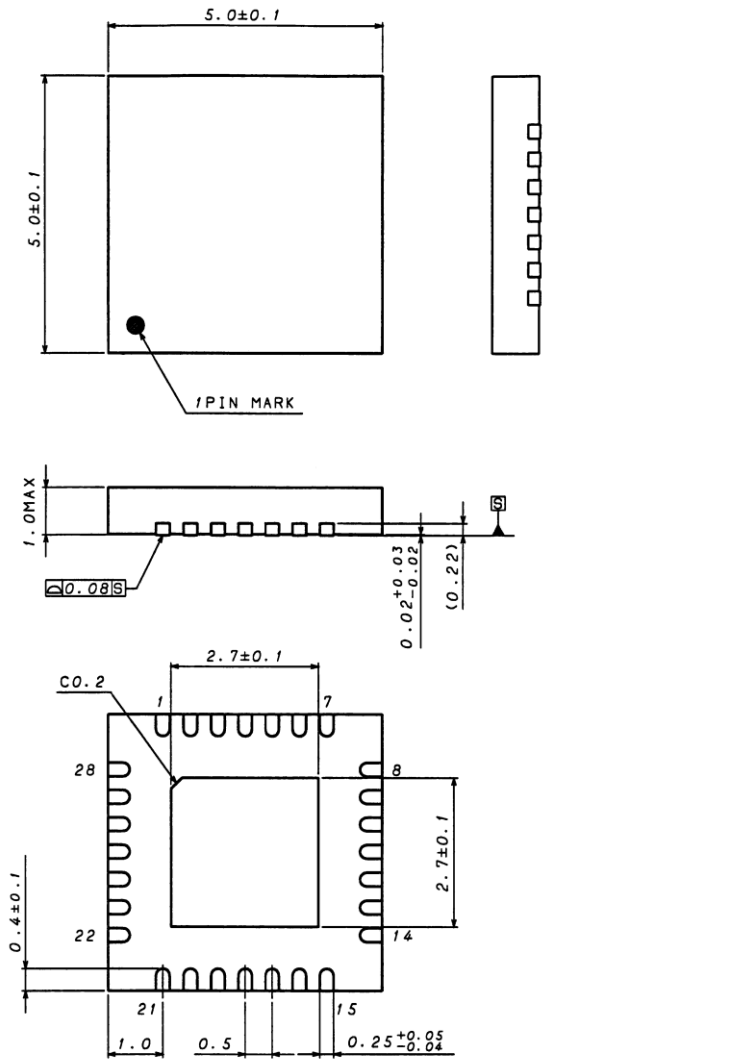

(UNIT:mm)

PKG:VQFN028V5050
Drawing No.EX473-5002-2

<Tape and Reel information>

Tape	Embossed carrier tape
Quantity	2500pcs
Direction of feed	E2 (The direction is the 1pin of product is at the upper left when you hold reel on the left hand and you pull out the tape on the right hand)

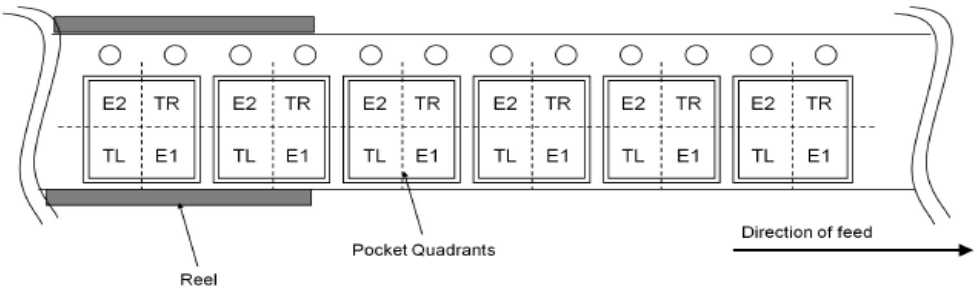

© 2018 ROHM Co., Ltd. All rights reserved.

Downloaded from Arrow.com.

Revision History

Date	Revision	Changes
26.Jan.2018	001	New Release
05.Jan.2021	002	P.15 Add the description P.29-2, P.29-3 Updated packages and part numbers

© 2018 ROHM Co., Ltd. All rights reserved.

Downloaded from Arrow.com.

Ordering Information

B	U	9	7	9	6	0	M	U	V	-	Z	E	2

- Part Number
- Package: MUV: VQFN28V5050A
- Production site: Z: Added
- Packaging and forming specification: E2: Embossed tape and reel

Marking Diagram

VQFN28V5050A (TOPVIEW)

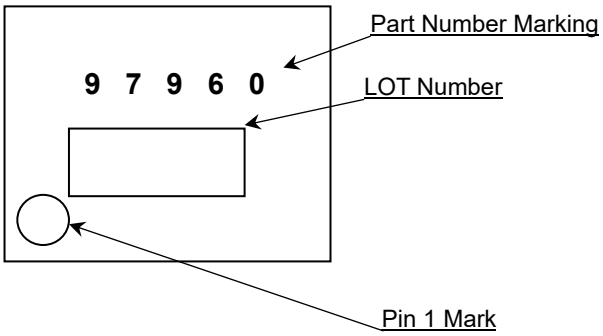

© 2018 ROHM Co., Ltd. All rights reserved.

Downloaded from Arrow.com.

Physical Dimension and Packing Information

Package Name	VQFN28V5050A

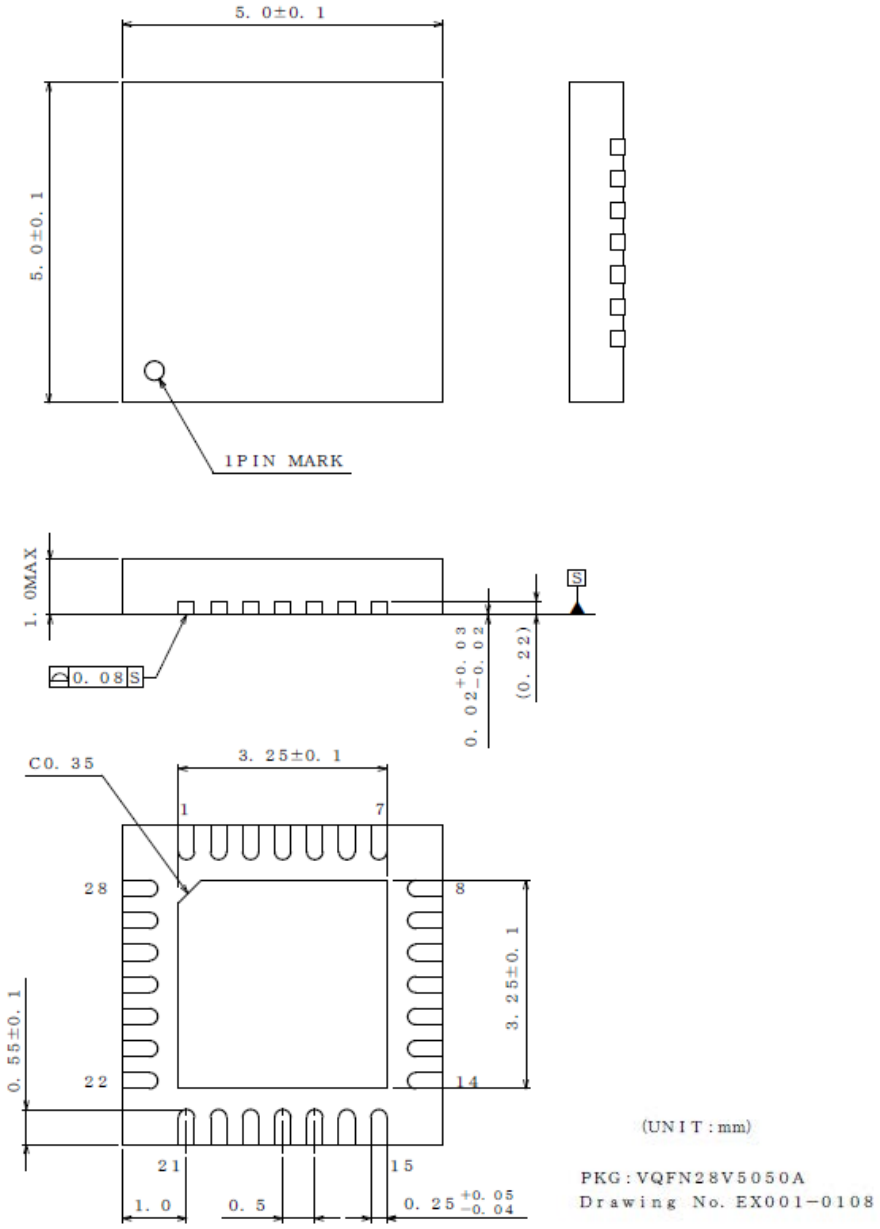

< Tape and Reel Information >

Tape	Embossed carrier tape
Quantity	2500pcs
Direction of feed	E2 The direction is the pin 1 of product is at the upper left when you hold reel on the left hand and you pull out the tape on the right hand

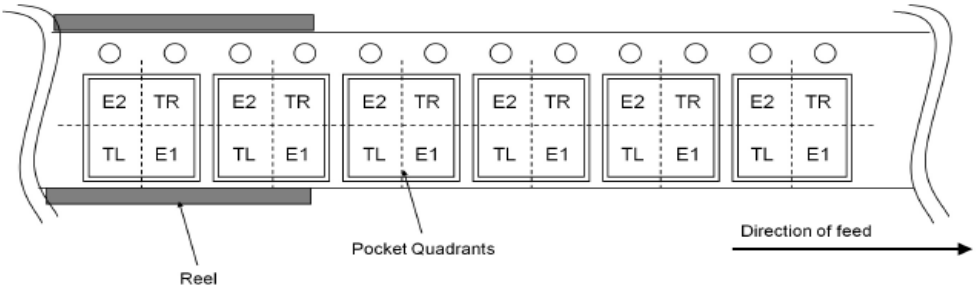

© 2018 ROHM Co., Ltd. All rights reserved.

Downloaded from Arrow.com.

Notice

Precaution on using ROHM Products

1. Our Products are designed and manufactured for application in ordinary electronic equipment (such as AV equipment, OA equipment, telecommunication equipment, home electronic appliances, amusement equipment, etc.). If you intend to use our Products in devices requiring extremely high reliability (such as medical equipment (Note 1), transport equipment, traffic equipment, aircraft/spacecraft, nuclear power controllers, fuel controllers, car equipment including car accessories, safety devices, etc.) and whose malfunction or failure may cause loss of human life, bodily injury or serious damage to property ("Specific Applications"), please consult with the ROHM sales representative in advance. Unless otherwise agreed in writing by ROHM in advance, ROHM shall not be in any way responsible or liable for any damages, expenses or losses incurred by you or third parties arising from the use of any ROHM's Products for Specific Applications.

(Note1) Medical Equipment Classification of the Specific Applications

JAPAN	USA	EU	CHINA
CLASSⅢ	CLASSⅢ	CLASSⅡb	CLASSⅢ
CLASSⅣ		CLASSⅢ	

2. ROHM designs and manufactures its Products subject to strict quality control system. However, semiconductor products can fail or malfunction at a certain rate. Please be sure to implement, at your own responsibilities, adequate safety measures including but not limited to fail-safe design against the physical injury, damage to any property, which a failure or malfunction of our Products may cause. The following are examples of safety measures:
   [a] Installation of protection circuits or other protective devices to improve system safety
   [b] Installation of redundant circuits to reduce the impact of single or multiple circuit failure

3. Our Products are designed and manufactured for use under standard conditions and not under any special or extraordinary environments or conditions, as exemplified below. Accordingly, ROHM shall not be in any way responsible or liable for any damages, expenses or losses arising from the use of any ROHM's Products under any special or extraordinary environments or conditions. If you intend to use our Products under any special or extraordinary environments or conditions (as exemplified below), your independent verification and confirmation of product performance, reliability, etc, prior to use, must be necessary:
   [a] Use of our Products in any types of liquid, including water, oils, chemicals, and organic solvents
   [b] Use of our Products outdoors or in places where the Products are exposed to direct sunlight or dust
   [c] Use of our Products in places where the Products are exposed to sea wind or corrosive gases, including Cl_2, H_2S, NH_3, SO_2, and NO_2
   [d] Use of our Products in places where the Products are exposed to static electricity or electromagnetic waves
   [e] Use of our Products in proximity to heat-producing components, plastic cords, or other flammable items
   [f] Sealing or coating our Products with resin or other coating materials
   [g] Use of our Products without cleaning residue of flux (Exclude cases where no-clean type fluxes is used. However, recommend sufficiently about the residue.) ; or Washing our Products by using water or water-soluble cleaning agents for cleaning residue after soldering
   [h] Use of the Products in places subject to dew condensation

4. The Products are not subject to radiation-proof design.

5. Please verify and confirm characteristics of the final or mounted products in using the Products.

6. In particular, if a transient load (a large amount of load applied in a short period of time, such as pulse, is applied, confirmation of performance characteristics after on-board mounting is strongly recommended. Avoid applying power exceeding normal rated power; exceeding the power rating under steady-state loading condition may negatively affect product performance and reliability.

7. De-rate Power Dissipation depending on ambient temperature. When used in sealed area, confirm that it is the use in the range that does not exceed the maximum junction temperature.

8. Confirm that operation temperature is within the specified range described in the product specification.

9. ROHM shall not be in any way responsible or liable for failure induced under deviant condition from what is defined in this document.

Precaution for Mounting / Circuit board design

1. When a highly active halogenous (chlorine, bromine, etc.) flux is used, the residue of flux may negatively affect product performance and reliability.

2. In principle, the reflow soldering method must be used on a surface-mount products, the flow soldering method must be used on a through hole mount products. If the flow soldering method is preferred on a surface-mount products, please consult with the ROHM representative in advance.

For details, please refer to ROHM Mounting specification

© 2015 ROHM Co., Ltd. All rights reserved.

Downloaded from Arrow.com.

Precautions Regarding Application Examples and External Circuits

1. If change is made to the constant of an external circuit, please allow a sufficient margin considering variations of the characteristics of the Products and external components, including transient characteristics, as well as static characteristics.

2. You agree that application notes, reference designs, and associated data and information contained in this document are presented only as guidance for Products use. Therefore, in case you use such information, you are solely responsible for it and you must exercise your own independent verification and judgment in the use of such information contained in this document. ROHM shall not be in any way responsible or liable for any damages, expenses or losses incurred by you or third parties arising from the use of such information.

Precaution for Electrostatic

This Product is electrostatic sensitive product, which may be damaged due to electrostatic discharge. Please take proper caution in your manufacturing process and storage so that voltage exceeding the Products maximum rating will not be applied to Products. Please take special care under dry condition (e.g. Grounding of human body / equipment / solder iron, isolation from charged objects, setting of Ionizer, friction prevention and temperature / humidity control).

Precaution for Storage / Transportation

1. Product performance and soldered connections may deteriorate if the Products are stored in the places where:
   [a] the Products are exposed to sea winds or corrosive gases, including Cl_2, H_2S, NH_3, SO_2, and NO_2
   [b] the temperature or humidity exceeds those recommended by ROHM
   [c] the Products are exposed to direct sunshine or condensation
   [d] the Products are exposed to high Electrostatic

2. Even under ROHM recommended storage condition, solderability of products out of recommended storage time period may be degraded. It is strongly recommended to confirm solderability before using Products of which storage time is exceeding the recommended storage time period.

3. Store / transport cartons in the correct direction, which is indicated on a carton with a symbol. Otherwise bent leads may occur due to excessive stress applied when dropping of a carton.

4. Use Products within the specified time after opening a humidity barrier bag. Baking is required before using Products of which storage time is exceeding the recommended storage time period.

Precaution for Product Label

A two-dimensional barcode printed on ROHM Products label is for ROHM's internal use only.

Precaution for Disposition

When disposing Products please dispose them properly using an authorized industry waste company.

Precaution for Foreign Exchange and Foreign Trade act

Since concerned goods might be fallen under listed items of export control prescribed by Foreign exchange and Foreign trade act, please consult with ROHM in case of export.

Precaution Regarding Intellectual Property Rights

1. All information and data including but not limited to application example contained in this document is for reference only. ROHM does not warrant that foregoing information or data will not infringe any intellectual property rights or any other rights of any third party regarding such information or data.

2. ROHM shall not have any obligations where the claims, actions or demands arising from the combination of the Products with other articles such as components, circuits, systems or external equipment (including software).

3. No license, expressly or implied, is granted hereby under any intellectual property rights or other rights of ROHM or any third parties with respect to the Products or the information contained in this document. Provided, however, that ROHM will not assert its intellectual property rights or other rights against you or your customers to the extent necessary to manufacture or sell products containing the Products, subject to the terms and conditions herein.

Other Precaution

1. This document may not be reprinted or reproduced, in whole or in part, without prior written consent of ROHM.

2. The Products may not be disassembled, converted, modified, reproduced or otherwise changed without prior written consent of ROHM.

3. In no event shall you use in any way whatsoever the Products and the related technical information contained in the Products or this document for any military purposes, including but not limited to, the development of mass-destruction weapons.

4. The proper names of companies or products described in this document are trademarks or registered trademarks of ROHM, its affiliated companies or third parties.

© 2015 ROHM Co., Ltd. All rights reserved.

Downloaded from Arrow.com.

General Precaution

1. Before you use our Products, you are requested to carefully read this document and fully understand its contents. ROHM shall not be in any way responsible or liable for failure, malfunction or accident arising from the use of any ROHM's Products against warning, caution or note contained in this document.

2. All information contained in this document is current as of the issuing date and subject to change without any prior notice. Before purchasing or using ROHM's Products, please confirm the latest information with a ROHM sales representative.

3. The information contained in this document is provided on an "as is" basis and ROHM does not warrant that all information contained in this document is accurate and/or error-free. ROHM shall not be in any way responsible or liable for any damages, expenses or losses incurred by you or third parties resulting from inaccuracy or errors of or concerning such information.

© 2015 ROHM Co., Ltd. All rights reserved.

Downloaded from Arrow.com.