Single-chip Type with built-in FET Switching Regulator Series

Flexible Step-down Switching Regulators with Built-in Power MOSFET

BD9778F, BD9778HFP, BD9001F, BD9781HFP

No.10027EBT41

Overview

The flexible step-down switching regulator controller is a switching regulator controller designed with a high-withstand-voltage built-in POWER MOS FET, providing a free setting function of operating frequency with external resistor. This switching regulator controller features a wide input voltage range (7 V to 35 V or 7 V to 48 V) and operating temperature range (-40˚C to +125˚C or -40˚C to +95˚C). Furthermore, an external synchronization input pin (BD9781HFP) enables synchronous operation with external clock.

Features

1) Minimal external components
2) Wide input voltage range: 7 V to 35 V (BD9778F/HFP and BD9781HFP), 7 V to 48 V (BD9001F)
3) Built-in P-ch POWER MOS FET
4) Output voltage setting enabled with external resistor: 1 to V_{IN}
5) Reference voltage accuracy: ±2%
6) Wide operating temperature range: -40˚C to +125˚C (BD9778F/HFP and BD9781HFP),
   -40˚C to +95˚C (BD9001F)
8) Low dropout: 100% ON Duty cycle
9) Standby mode supply current: 0 µA (Typ.) (BD9778F/HFP and BD9781HFP), 4 µA (Typ.) (BD9001F)
10) Oscillation frequency variable with external resistor: 50 to 300 kHz (BD9001F),
    50 to 500 kHz (BD9778F/HFP and BD9781HFP)
11) External synchronization enabled (only on the BD9781HFP)
12) Soft start function : soft start time fixed to 5 ms (Typ.))
13) Built-in overcurrent protection circuit
14) Built-in thermal shutdown protection circuit
15) High power HRP7 package mounted (BD9778HFP and BD9781HFP)
    Compact SOP8 package mounted (BD9778F and BD9001F)

Applications

All fields of industrial equipment, such as Flat TV , printer, DVD, car audio, car navigation, and communication such as ETC, AV, and OA.

Product lineup

Item	BD9778F/HFP	BD9001F	BD9781HFP
Output current	2A	2A	4A
Input range	7V ~ 35V	7V ~ 48V	7V ~ 35V
Oscillation frequency range	50 ~ 500kHz	50 ~ 300kHz	50 ~ 500kHz
External synchronization	Not provided	Not provided	Provided
Standby function	Provided	Provided	Provided
Operating temperature	–40˚C ~ +125˚C	–40˚C ~ +95˚C	–40˚C ~ +125˚C
Package	SOP8 / HRP7	SOP8	HRP7

© 2010 ROHM Co., Ltd. All rights reserved.

Downloaded from Arrow.com.

● Absolute Maximum Ratings(Ta = 25˚C)

Parameter		Symbol	Limits	Unit
Power supply voltage	BD9778F/HFP,BD9781HFP	V_{IN}	36	V
	BD9001F		50	
Output switch pin voltage		V_{SW}	V_{IN}	V
Output switch current	BD9778F/HFP, BD9001F	I_{SW}	2 *1	A
	BD9781HFP		4 *1	
EN/SYNC, EN pin voltage		$V_{EN/SYNC}$,V_{EN}	V_{IN}	V
RT, FB, INV pin voltage		V_{RT},V_{FB},V_{INV}	7	
Power dissipation	HRP7	P_d	5.5 *2	W
	SOP8		0.69 *3	
Operating temperature range	BD9778F/HFP,BD9781HFP	T_{opr}	–40 ~ +125	˚C
	BD9001F		–40 ~ +95	
Storage temperature range		T_{stg}	–55 ~ +150	˚C
Maximum junction temperature		T_{jmax}	150	˚C

*1 Should not exceed Pd-value.
*2 Reduce by 44mW/°C over 25°C, when mounted on 2-layer PCB of 70 X 70 X 1.6 mm3.
(PCB incorporates thermal via. Copper foil area on the front side of PCB: 10.5 X 10.5 mm2. Copper foil area on the reverse side of PCB: 70 X 70 mm2)
*3 Reduce by 5.52 mW/°C over 25°C, when mounted on 2-layer PCB of 70 X 70 X 1.6 mm3.

● Recommended operating range

Parameter	BD9778F/HFP	BD9001F	BD9781HFP	Unit
Operating power supply voltage	7 ~ 35	7 ~ 48	7 ~ 35	V
Output switch current	~ 2	~ 2	~ 4	A
Output voltage (ON Duty)	6 ~ 100	6 ~ 100	6 ~ 100	%
Oscillation frequency	50 ~ 500	50 ~ 300	50 ~ 500	kHz
Oscillation frequency set resistance	40 ~ 800	100 ~ 800	39 ~ 800	kΩ

● Possible operating range

Parameter	BD9778F/HFP	BD9001F	BD9781HFP	Unit
Operating power supply voltage	5 ~ 35	7 ~ 48	5 ~ 35	V

● Electrical characteristics

◎BD9778F/HFP (Unless otherwise specified, Ta = -40˚C to +125˚C, V_{IN} =13.2 V, V_{EN} = 5 V)

Parameter	Symbol	Limits			Unit	Condition
		Min.	Typ.	Max.		
Standby circuit current	I_{STB}	–	0	10	μA	V_{EN}=0V,Ta=25˚C
Circuit current	I_Q	–	3	4.2	mA	I_O=0A
[SW block]						
POWER MOS FET ON resistance	R_{ON}	–	0.53	0.9	Ω	I_{SW}=50mA
Operating output current of overcurrent protection	I_{OLIMIT}	2	4	–	A	* Design assurance
Output leak current	I_{OLEAK}	–	0	30	μA	V_{IN}=35V,V_{EN}=0V
[Error Amp block]						
Reference voltage 1	V_{REF1}	0.98	1.00	1.02	V	V_{FB}=V_{INV},Ta=25˚C
Reference voltage 2	V_{REF2}	0.96	1.00	1.04	V	V_{FB}=V_{INV}
Reference voltage input regulation	ΔV_{REF}	–	0.5	–	%	V_{IN}=5 ~ 35V
Input bias current	I_B	–1	–	–	μA	V_{INV}=1.1V
Maximum FB voltage	V_{FBH}	2.4	2.5	–	V	V_{INV}=0.5V
Minimum FB voltage	V_{FBL}	–	0.05	0.10	V	V_{INV}=1.5V
FB sink current	I_{FBSINK}	–5.0	–3.0	–0.5	mA	V_{FB}=1.5V,V_{INV}=1.5V
FB source current	$I_{FBSOURCE}$	70	120	170	μA	V_{FB}=1.5V,V_{INV}=0.5V
Soft start time	T_{SS}	–	5	–	mS	* Design assurance
[Oscillator block]						
Oscillation frequency	F_{OSC}	82	102	122	kHz	R_T=390kΩ
Frequency input regulation	ΔF_{OSC}	–	1	–	%	V_{IN}=5 ~ 35V
[Enable block]						
Threshold voltage	V_{EN}	0.8	1.7	2.6	V	
Sink current	I_{EN}	–	13	50	μA	V_{EN}=5V

* Not designed to be radiation-resistant.

© 2010 ROHM Co., Ltd. All rights reserved.

Downloaded from Arrow.com.

◎BD9001F (Unless otherwise specified, Ta=–40˚C ~ +95˚C,V_{IN}=13.2V, V_{EN}=5V)

Parameter	Symbol	Limits			Unit	Condition
		Min.	Typ.	Max.		
Standby circuit current	I_{STB}	–	4	10	μA	V_{EN}=0V,Ta=25˚C
Circuit current	I_Q	–	3	4.2	mA	I_O=0A
[SW block]						
POWER MOS FET ON resistance	R_{ON}	–	0.6	1.2	Ω	I_{SW}=50mA
Operating output current of overcurrent protection	I_{OLIMIT}	2.5	4	–	A	* Design assurance
[Error Amp block]						
Reference voltage 1	V_{REF1}	0.98	1.00	1.02	V	V_{FB}=V_{INV},Ta=25˚C
Reference voltage 2	V_{REF2}	0.96	1.00	1.04	V	V_{FB}=V_{INV}
Reference voltage input regulation	ΔVREF	–	0.5	–	%	V_{IN}=7 ~ 48V
Input bias current	I_B	–1	–	–	μA	V_{INV}=1.1V
Maximum FB voltage	V_{FBH}	2.4	2.5	–	V	V_{INV}=0.5V
Minimum FB voltage	V_{FBL}	–	0.05	0.10	V	V_{INV}=1.5V
FB sink current	I_{FBSINK}	–5.0	–3.0	–0.5	mA	V_{FB}=1.5V,V_{INV}=1.5V
FB source current	$I_{FBSOURCE}$	70	120	170	μA	V_{FB}=1.5V,V_{INV}=0.5V
Soft start time	T_{SS}	–	5	–	ms	* Design assurance
[Oscillator block]						
Oscillation frequency	F_{OSC}	82	102	122	kHz	R_T=390kΩ
Frequency input regulation	ΔFOSC	–	2	–	%	V_{IN}=7 ~ 48V
[Enable block]						
Threshold voltage	V_{EN}	0.8	1.7	2.6	V	
Sink current	I_{EN}	–	13	50	μA	V_{EN}=5V

* Not designed to be radiation-resistant.

◎BD9781HFP (Unless otherwise specified, Ta=–40˚C ~ +125˚C,V_{IN}=13.2V,$V_{EN/SYNC}$=5V)

Parameter	Symbol	Limits			Unit	Condition
		Min.	Typ.	Max.		
Standby circuit current	I_{STB}	–	0	10	μA	$V_{EN/SYNC}$=0V,Ta=25ºC
Circuit current	I_Q	–	3	8	mA	I_O=0A
[SW block]						
POWER MOS FET ON resistance	R_{ON}	–	0.5	0.9	Ω	I_{SW}=50mA
Operating output current of overcurrent protection	I_{OLIMIT}	4	8	–	A	* Design assurance
Output leak current	I_{OLEAK}	–	0	30	μA	V_{IN}=35V,$V_{EN/SYNC}$=0V
[Error Amp block]						
Reference voltage1	V_{REF1}	0.98	1.00	1.02	V	V_{FB}=V_{INV},Ta=25ºC
Reference voltage2	V_{REF2}	0.97	1.00	1.03	V	V_{FB}=V_{INV}
Reference voltage input regulation	ΔVREF	–	0.5	–	%	V_{IN}=5 ~ 35V
Input bias current	I_B	–1	–	–	μA	V_{INV}=1.1V
Maximum FB voltage	V_{FBH}	2.4	2.5	–	V	V_{INV}=0.5V
Minimum FB voltage	V_{FBL}	–	0.05	0.10	V	V_{INV}=1.5V
FB sink current	I_{FBSINK}	–5.0	–3.0	–0.5	mA	V_{FB}=1.5V,V_{INV}=1.5V
FB source current	$I_{FBSOURCE}$	70	120	170	μA	V_{FB}=1.5V,V_{INV}=0.5V
Soft start time	T_{SS}	–	5	–	mS	* Design assurance
[Oscillator block]						
Oscillation frequency	F_{OSC}	82	102	122	kHz	R_T=390kΩ
Frequency input regulation	ΔFOSC	–	1	–	%	V_{IN}=5 ~ 35V
[Enable/Synchronizing input block]						
Threshold voltage	$V_{EN/SYNC}$	0.8	1.7	2.6	V	
Sink current	$I_{EN/SYNC}$	–	35	90	μA	$V_{EN/SYNC}$=5V
External synchronizing frequency	F_{SYNC}	–	150	–	kHz	$F_{EN/SYNC}$=150kHz

* Not designed to be radiation-resistant.

© 2010 ROHM Co., Ltd. All rights reserved.

Downloaded from Arrow.com.

● Reference data

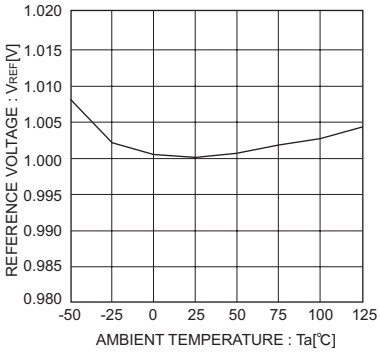

Fig.1 Output reference voltage vs. Ambient temprature(All series)

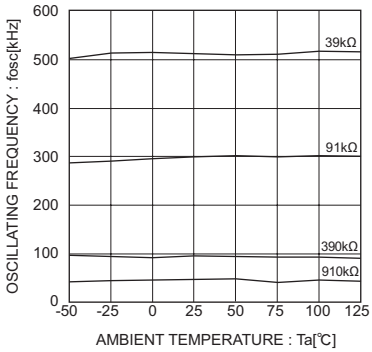

Fig.2 Frequency vs. Ambient temperature(All series)

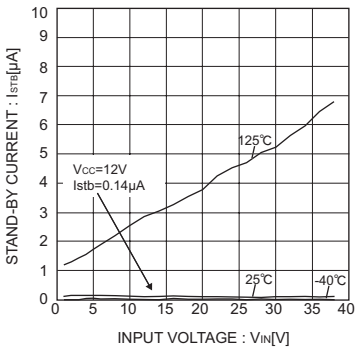

Fig.3 Standby current(BD9781HFP)

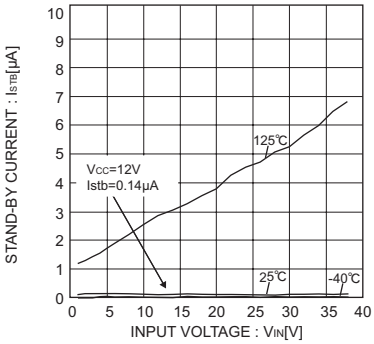

Fig.4 Standby current(BD9778F/HFP)

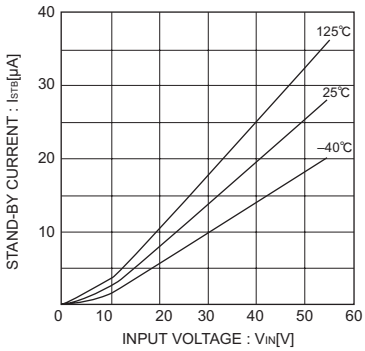

Fig.5 Standby current(BD9001F)

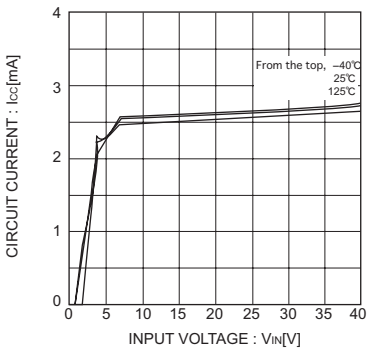

Fig.6 Circuit current(BD9781HFP)

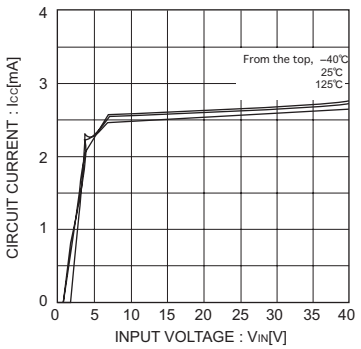

Fig.7 Circuit current(BD9778F/HFP)

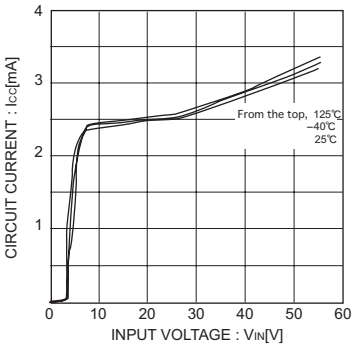

Fig.8 Circuit current(BD9001F)

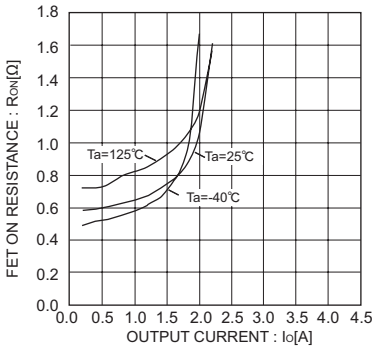

Fig.9 ON resistance VIN=5V(BD9781HFP)

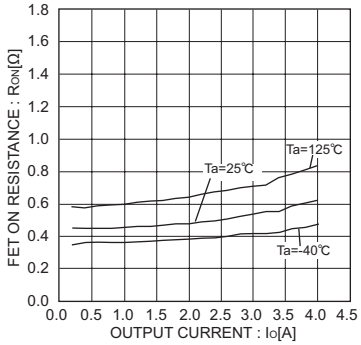

Fig.10 ON resistance VIN=7V (BD9781HFP)

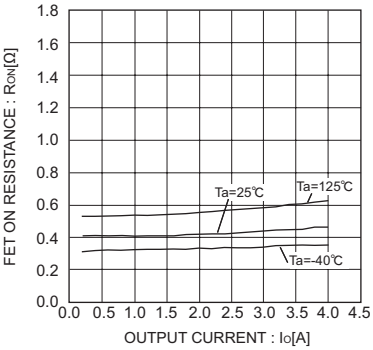

Fig.11 ON resistanceVIN=13.2V (BD9781HFP)

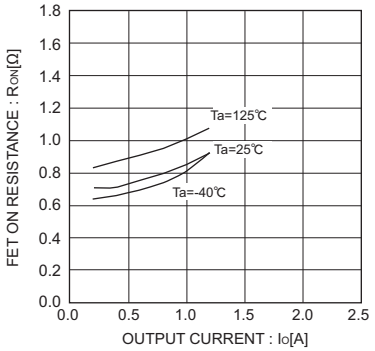

Fig.12 ON resistance VIN=5V (BD9778F/HFP)

© 2010 ROHM Co., Ltd. All rights reserved.

Downloaded from Arrow.com.

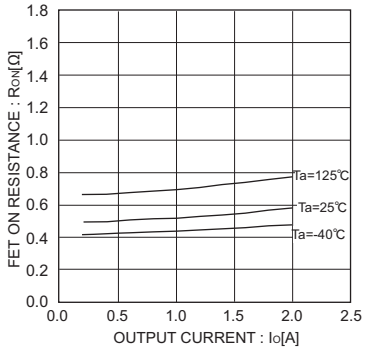

Fig.13 ON resistance VIN=7V (BD9778F/HFP)

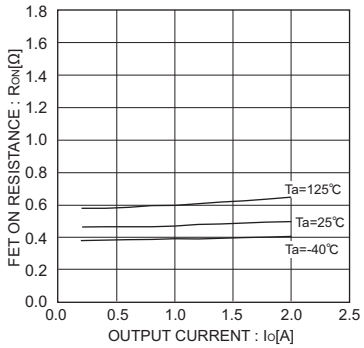

Fig.14 ON resistance VIN=13.2V (BD9778F/HFP)

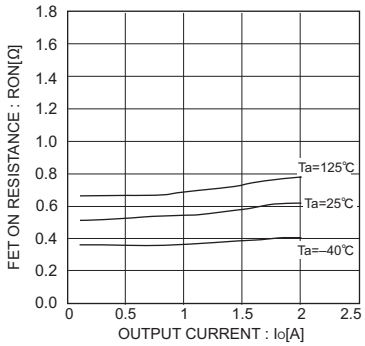

Fig.15 ON resistance VIN=7V (BD9001F)

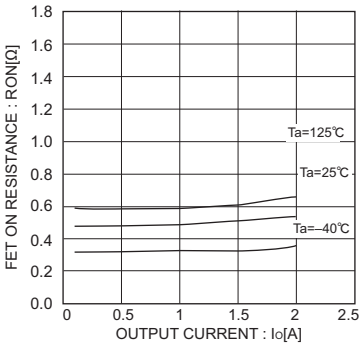

Fig.16 ON resistance VIN=13.2V
(BD9001F)

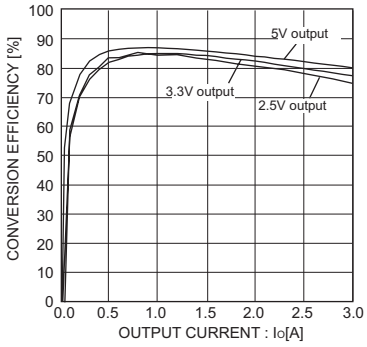

Fig.17 IO vs Efficiency(VIN=12V,f=200kHz)
(BD9781HFP)

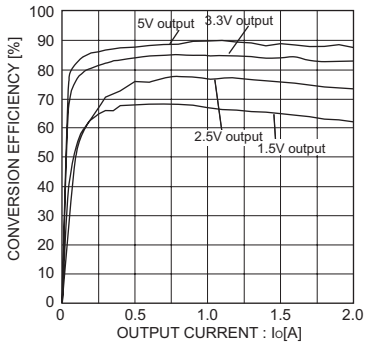

Fig.18 IO vs Efficiency(VIN=12V,f=100kHz)
(BD9778F/HFP)

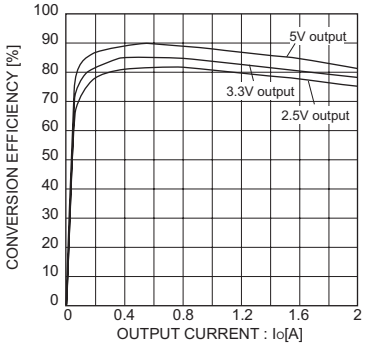

Fig.19 IO vs Efficiency(VIN=12V,f=100kHz)
(BD9001F)

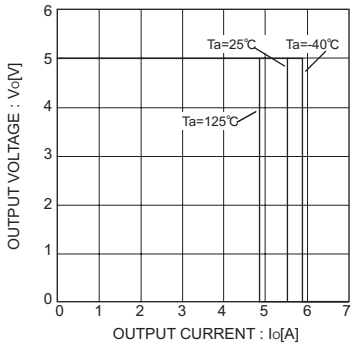

Fig.20 Current capacitance(VIN=12V,Vo=5V,f=100kHz)
(BD9781HFP)

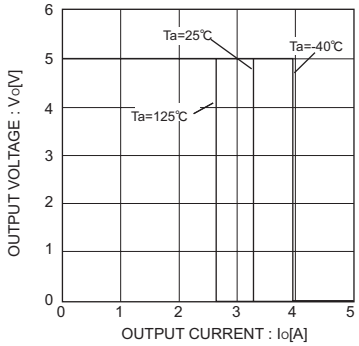

Fig.21 Current capacitance(VIN=12V,Vo=5V,f=100kHz)
(BD9778F/HFP)

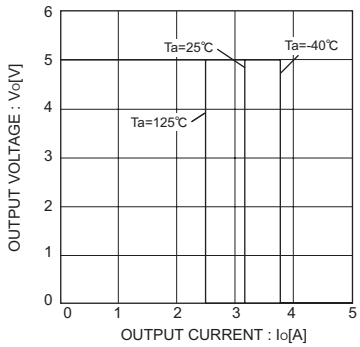

Fig.22 Current capacitance(VIN=12V,Vo=5V,f=100kHz)
(BD9001F)

© 2010 ROHM Co., Ltd. All rights reserved.

Downloaded from Arrow.com.

● Block diagram / Application circuit / Pin assignment

(BD9778F)

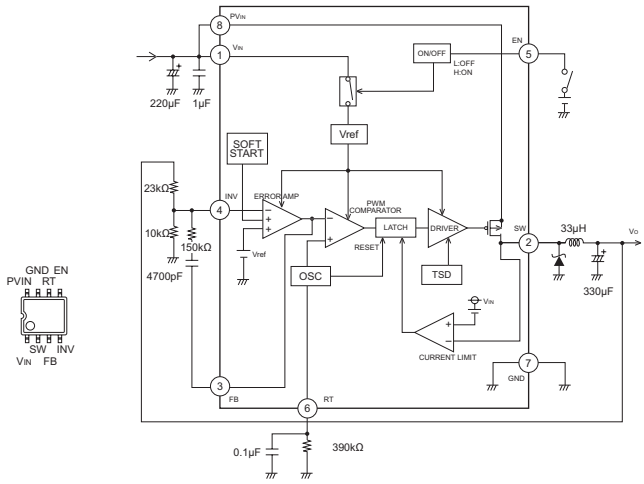

Fig.23

(BD9778HFP)

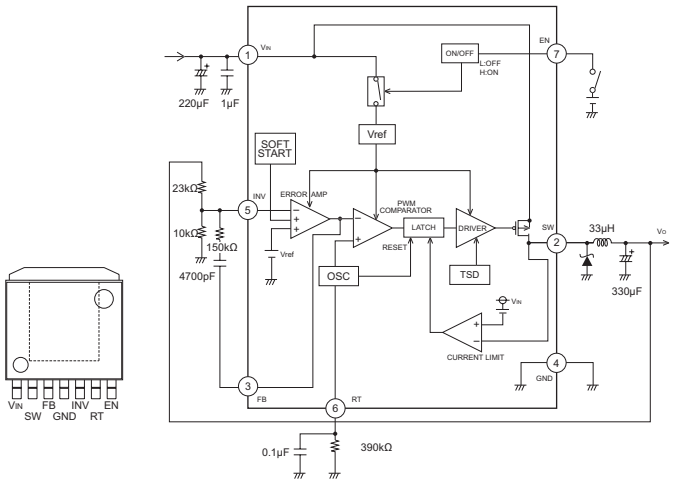

Fig.24

No.	Pin name	Function
1	VIN	Power supply input
2	SW	Output
3	FB	Error Amp output
4	INV	Output voltage feedback
5	EN	Enable
6	RT	Frequency setting resistor connection
7	GND	Ground
8	PVIN	Power system power supply input

No.	Pin name	Function
1	VIN	Power supply input
2	SW	Output
3	FB	Error Amp output
4	GND	Ground
5	INV	Output voltage feedback
6	RT	Frequency setting resistor connection
7	EN	Enable
FIN	–	Ground

(BD9001F)

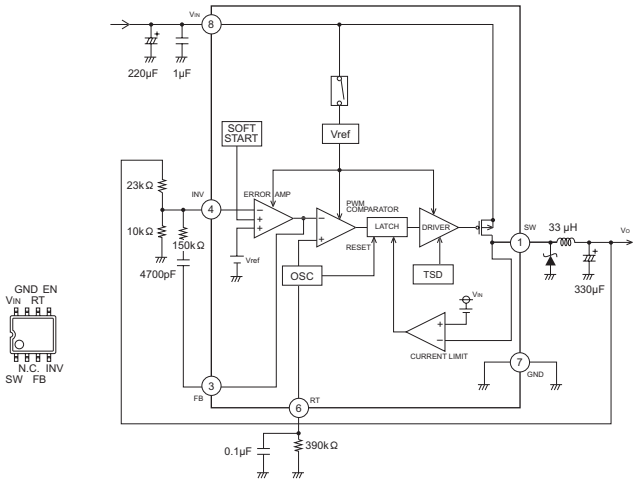

Fig.25

(BD9781HFP)

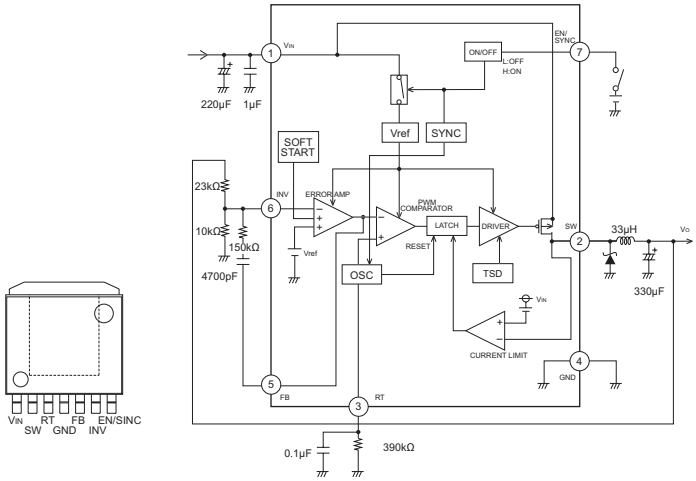

Fig.26

No.	Pin name	Function
1	SW	Output
2	N.C.	Non Connection
3	FB	Error Amp Output
4	INV	Output voltage feedback
5	EN	Enable
6	RT	Frequency setting resistor connection
7	GND	Ground
8	VIN	Power supply input

No.	Pin name	Function
1	VIN	Power supply input
2	SW	Output
3	RT	Frequency setting resistor connection
4	GND	Ground
5	FB	Error Amp output
6	INV	Output voltage feedback
7	EN/SYNC	Enable/Synchronizing pulse input
FIN	–	Ground

© 2010 ROHM Co., Ltd. All rights reserved.

Downloaded from Arrow.com.

● Description of operations

・ERROR AMP
The ERROR AMP block is an error amplifier used to input the reference voltage (1 V typ.) and the INV pin voltage. The output FB pin controls the switching duty and output voltage Vo. These INV and FB pins are externally mounted to facilitate phase compensation. Inserting a capacitor and resistor between these pins enables adjustment of phase margin. (Refer to recommended examples on page 11.)

・SOF T START
The SOFT START block provides a function to prevent the overshoot of the output voltage Vo through gradually increasing the normal rotation input of the error amplifier when power supply turns ON to gradually increase the switching Duty. The soft start time is set to 5 msec (Typ.).

・ON/OFF(BD9778F/HF P,BD9781HFP)
Setting the EN pin to 0.8 V or less makes it possible to shut down the circuit. Standby current is set to 0 μA (Typ.).
Furthermore, on the BD9781HFP, applying a pulse having a frequency higher than set oscillation frequency to the EN/SYNC pin allows for external synchronization (up to +50% of the set frequency).

・PWM COM PARATOR
The PWM COMPARATOR block is a comparator to make comparison between the FB pin and internal triangular wave and output a switching pulse.
The switching pulse duty varies with the FB value and can be set in the range of 0 to 100%.

・OSC(Oscillator)
The OSC block is a circuit to generate a triangular wave that is to be input in the PWM comparator. Connecting a resistor to the RT pin enables setting of oscillation frequency.

・TSD(Thermal Shut Down)
In order to prevent thermal destruction/thermal runaway of this IC, the TSD block will turn OFF the output when the chip temperature reaches approximately 150˚C or more. When the chip temperature falls to a specified level, the output will be reset. However, since the TSD is designed to protect the IC, the chip junction temperature should be provided with the thermal shutdown detection temperature of less than approximately 150˚C.

・CURREN T LIMIT
While the output POWER P-ch MOS FET is ON, if the voltage between drain and source (ON resistance ¥ load current) exceeds the reference voltage internally set with the IC, this block will turn OFF the output to latch. The overcurrent protection detection values have been set as shown below:

BD9781HFP . . . 8A(Typ.)
BD9001F,BD9778F/HFP . . . 4A(Typ.)

Furthermore, since this overcurrent protection is an automatically reset, after the output is turned OFF and latched, the latch will be reset with the RESET signal output by each oscillation frequency.

However, this protection circuit is only effective in preventing destruction from sudden accident. It does not support for the continuous operation of the protection circuit (e.g. if a load, which significantly exceeds the output current capacitance, is normally connected). Furthermore, since the overcurrent protection detection value has negative temperature characteristics, consider thermal design.

© 2010 ROHM Co., Ltd. All rights reserved.

Downloaded from Arrow.com.

● Timing chart
(BD9781HFP)

- While in basic operation mode

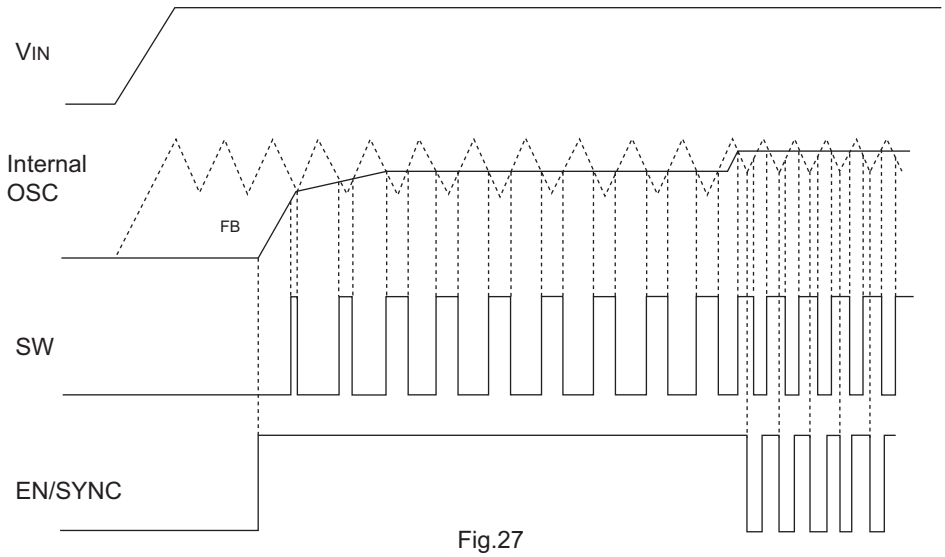

Fig.27

- While in overcurrent protection mode

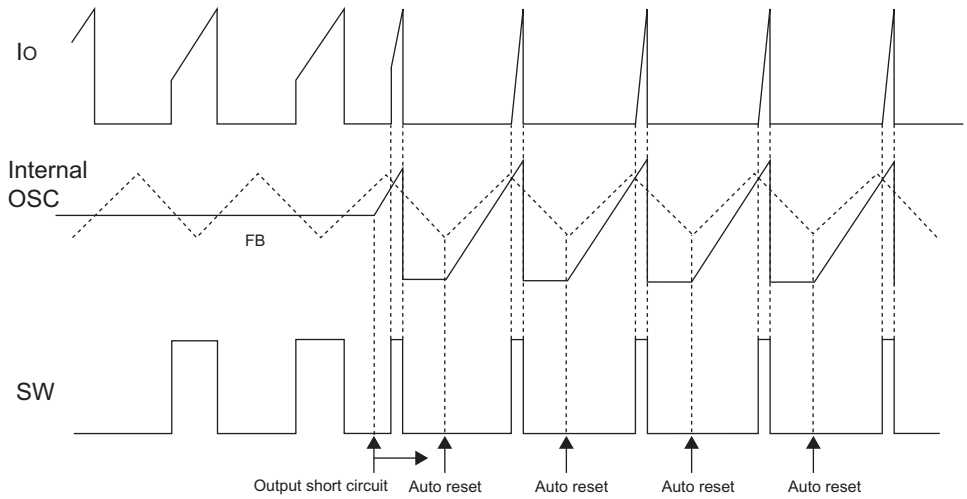

Fig.28

● External synchronizing function (BD9781HFP)
In order to activate the external synchronizing function, connect the frequency setting resistor to the RT pin and then input a synchronizing signal to the EN/SYNC pin. As the synchronizing signal, input a pulse wave higher than a frequency determined with the setting resistor (RT). On the BD9781HFP, design the frequency difference to be within 50%. Furthermore, set the pulse wave duty between 10% and 90%.

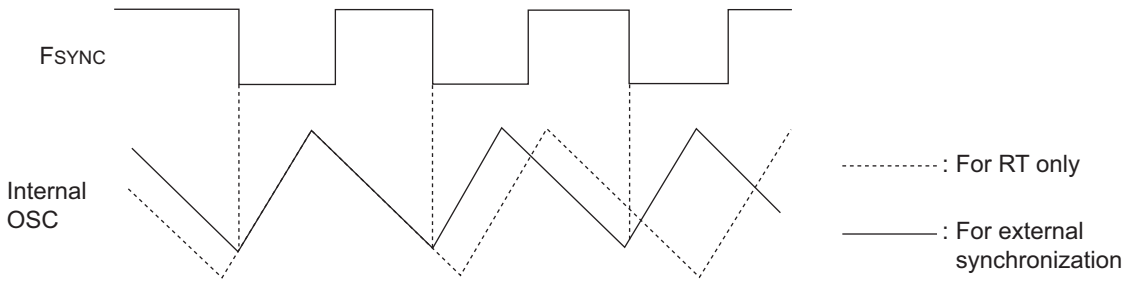

Fig.29

© 2010 ROHM Co., Ltd. All rights reserved.

Downloaded from Arrow.com.

● Description of external components

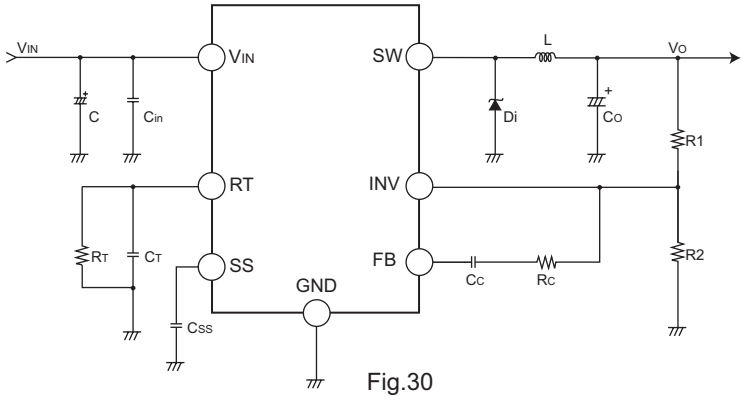

Fig.30

Design procedure	Calculation example
Vo = Output voltage, Vin (Max.) = Maximum input voltage Io (Max.) = Maximum load current, f = Oscillation frequency	
1. Setting or output voltage Output voltage can be obtained by the formula shown below. V_O=1 x (1+R1/R2) Use the formula to select the R1 and R2. Furthermore, set the R2 to 30 kΩ or less. Select the current passing through the R1 and R2 to be small enough for the output current.	When Vo = 5 V and R2 = 10 kΩ, 5=1 x (1+R1/10kΩ) R1=40kΩ
2. Selection of coil (L) The value of the coil can be obtained by the formula shown below: L=(V_{IN}–V_O) x V_O / (V_{IN} x f x ΔI_O) ΔI_O: Output ripple current f = Operating frequency ΔIo should typically be approximately 20 to 30% of Io. If this coil is not set to the optimum value, normal (continuous) oscillation may not be achieved. Furthermore, set the value of the coil with an adequate margin so that the peak current passing through the coil will not exceed the rated current of the coil.	When V_{IN} = 13.2 V, Vo = 5 V, Io = 2 A, and f = 100 kHz, L=(13.2–5) x 5/13.2 x 1/100k x 1/(2 x 0.3) =51.8μH≒47μ L=47μH
3. Selection of output capacitor (Co) The output capacitor can be determined according to the output ripple voltage ΔVo (p-p) required. Obtain the required ESR value by the formula shown below and then select the capacitance. ΔI_L=(V_{IN}-V_O) x V_O/(L x f x V_{IN}) ΔV_{pp}=ΔI_L x ESR+(ΔI_L x Vo)/(2 x Co x f x V_{IN}) Set the rating of the capacitor with an adequate margin to the output voltage. Also, set the maximum allowable ripple current with an adequate margin to ΔI_L. Furthermore, the output rise time should be shorter than the soft start time. Select the output capacitor having a value smaller than that obtained by the formula shown below. C_{Max}= (3.5m x (I_{Limit}-Io(Max)) / Vo I_{Limit}:2A(BD9778F/HFP,BD9001F), 4A(BD9781HFP) If this capacitance is not optimum, faulty startup may result. (※3.5m is soft start time(min.))	V_{IN}=13.2V, Vo=5V, L=100μH, f=100kHz ΔI_L=(13.2-5) x 5/(100 x 10^{-6} x 100 x 10^3 x 13.2) ≒0.31 ΔI_L=0.31A When I_{Limit}: 2 A, Io (Max) = 1 A, and Vo = 5V, C_{Max}=3.5m x (2-1)/5 =700μ C_{Max}=700μF

© 2010 ROHM Co., Ltd. All rights reserved.

Downloaded from Arrow.com.

Design procedure	Calculation example
4. Selection of diode Set diode rating with an adequate margin to the maximum load current. Also, make setting of the rated inverse voltage with an adequate margin to the maximum input voltage. A diode with a low forward voltage and short reverse recovery time will provide high efficiency.	When V_{IN} = 36 V and Io = (max.) 2 A, Select a diode of rated current of 2 A or more and rated withstand voltage of 36 V or more.
5. Selection of input capacitor Two capacitors, ceramic capacitor C_{IN} and bypass capacitor C, should be inserted between the V_{IN} and GND.Be sure to insert a ceramic capacitor of 1 to 10 μF for the C. The capacitor C should have a low ESR and a significantly large ripple current. The ripple current I_{RMS} can be obtained by the following formula: $I_{RMS}=I_O \times \sqrt{V_O \times (V_{in}-V_O)/V_{in}^2}$ Select capacitors that can accept this ripple current. If the capacitance of CIN and C is not optimum, the IC may malfunction.	When V_{IN} = 13.2 V, Vo = 5 V, and Io = 1 A, $I_{RMS}=1 \times \sqrt{5 \times (13.2-5)/(13.2)^2}$ $=0.485$ I_{RMS}=0.485A
6. Setting of oscillation frequency Referring Fig. 34 and Fig. 35 on the following page, select R for the oscillation frequency to be used. Furthermore, in order to eliminate noises, be sure to connect ceramic capacitors of 0.1 to 1.0 μF in parallel.	
7. Setting of phase compensation (Rc and Cc) The phase margin can be set through inserting a capacitor or a capacitor and resistor between the INV pin and the FB pin. Each set value varies with the output coil, capacitance, I/O voltage, and load. Therefore, set the phase compensation to the optimum value according to these conditions. (For details, refer to Application circuit on page 11.) If this setting is not optimum, output oscillation may result.	

* The set values listed above are all reference values. On the actual mounting of the IC, the characteristics may vary with the routing of wirings and the types of parts in use. In this connection, it is recommended to thoroughly verify these values on the actual system prior to use.

● Directions for pattern layout of PCB

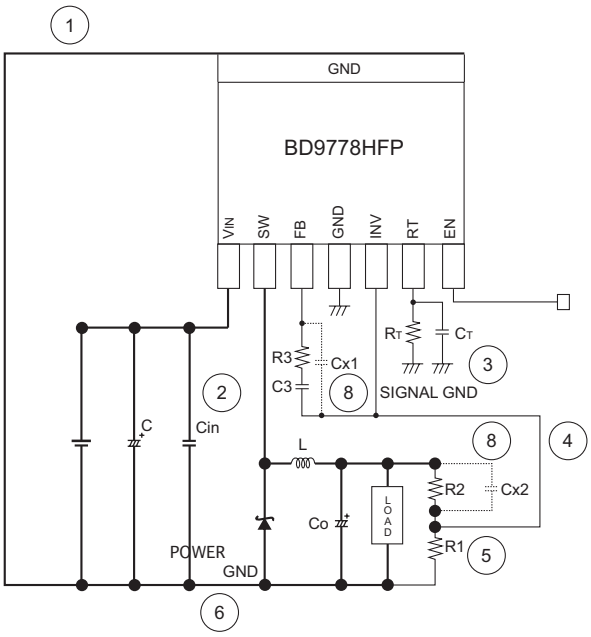

Fig.31

① Arrange the wirings shown by heavy lines as short as possible in a broad pattern.
② Locate the input ceramic capacitor Cin as close to the VIN-GND pin as possible.
③ Locate the R_T and C_T as close to the GND pin as possible.
④ Locate the R1 and R2 as close to the INV pin as possible, and provide the shortest wiring from the R1 and R2 to the INV pin.
⑤ Locate the R1 and R2 as far away from the L as possible.
⑥ Separate POWER GND(Schottky diode, I/O capacitor's GND) and SIGNAL GND(R_T, C_T's GND), so that SW noise don't have an effect on SIGNAL GND at all.
⑦ Design the POWER wire line as wide and short as possible.
⑧ Additional pattern for Cx1 and Cx2 expand compesation flexibility.

© 2010 ROHM Co., Ltd. All rights reserved.

Downloaded from Arrow.com.

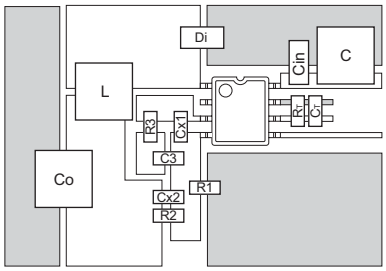

Fig.32 BD9001F reference layout pattern

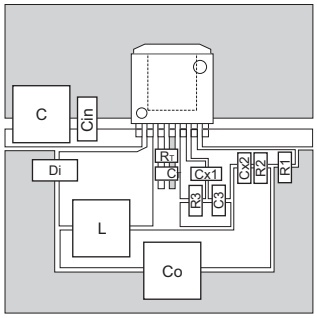

Fig.33 BD9781HFP reference layout pattern

※ As shown above, design the GND pattern as large area as possible within inner layer.
※ Gray zones indicate GND.

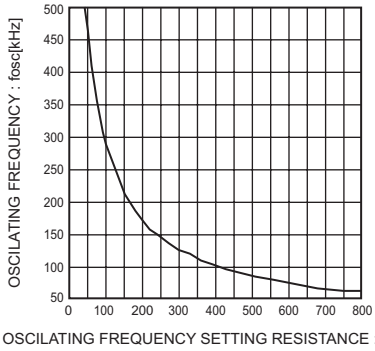

Fig.34 RT vs fosc (BD9781HFP/BD9778F/HFP)

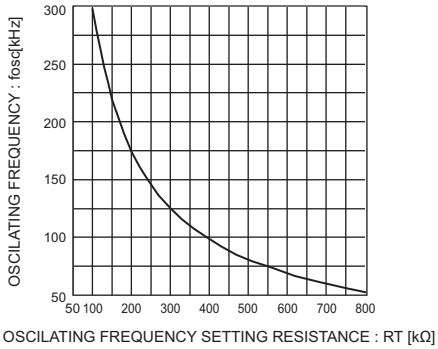

Fig.35 RT vs fosc (BD9001F)

※Oscillation frequency's graph value is Typical value,
oscillation frequency is necessary to consider ±20% as dispersion.

● Phase compensation setting procedure

1. Application stability conditions

The following section describes the stability conditions of the negative feedback system.

Since the DC/DC converter application is sampled according to the switching frequency, GBW (frequency at 0-dB gain) of the overall system should be set to 1/10 or less of the switching frequency. The following section summarizes the targeted characteristics of this application.

- At a 1 (0-dB) gain, the phase delay is 150˚ or less (i.e., the phase margin is 30˚ or more).
- The GBW for this occasion is 1/10 or less of the switching frequency.

Responsiveness is determined with restrictions on the GBW. To improve responsiveness, higher switching frequency should be provided.

Replace a secondary phase delay (-180˚) with a secondary phase lead by inserting two phase leads, to ensure the stability through the phase compensation. Furthermore, the GBW (i.e., frequency at 0-dB gain) is determined according to phase compensation capacitance provided for the error amplifier. Consequently, in order to reduce the GBW, increase the capacitance value.

(1) Typical integrator (Low pass filter)

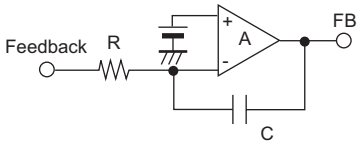

(2) Open loop characteristics of integrator

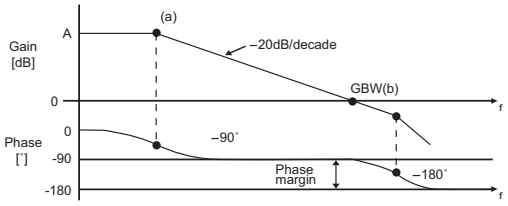

Point (a) $fa = \frac{1}{2\pi RCA}$ [Hz]

Point (b) $fb = GBW = \frac{1}{2\pi RC}$ [Hz]

Since the error amplifier is provided with (1) or (2) phase compensation, the low pass filter is applied. In the case of the DC/DC converter application, the R becomes a parallel resistance of the feedback resistance.

© 2010 ROHM Co., Ltd. All rights reserved.

Downloaded from Arrow.com.

2. For output capacitors having high ESR, such as electrolyte capacitor

For output capacitors that have high ESR (i.e., several Ω), the phase compensation setting procedure becomes comparatively simple. Since the DC/DC converter application has a LC resonant circuit attached to the output, a -180˚ phase-delay occurs in that area. If ESR component is present, howeve r, a +90˚ phase-lead occurs to shift the phase delay to -90˚. Since the phase delay should be set within 150˚, it is a very effective method but tends to increase the ripple component of the output voltage.

(1) LC resonant circuit

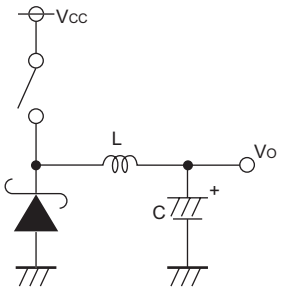

$$fr = \frac{1}{2\pi\sqrt{LC}} \text{ [Hz]}$$

At this resonance point, a -180˚ phase-delay occurs.

(2) With ESR provided

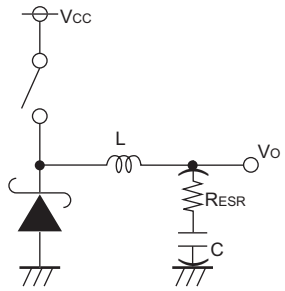

$$fr = \frac{1}{2\pi\sqrt{LC}} \text{ [Hz]: Resonance point}$$

$$f_{ESR} = \frac{1}{2\pi\ R_{ESR}C} \text{ [Hz]: Phase lead}$$

A -90˚ phase-delay occurs.

According to changes in phase characteristics, due to the ESR, only one phase lead should be inserted. For this phase lead, select either of the methods shows below:

(3) Insert feedback resistance in the C.

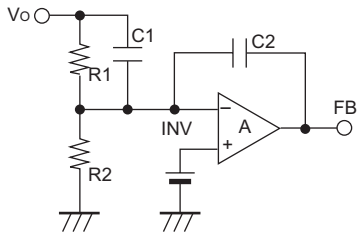

$$\text{Phase lead: } fz = \frac{1}{2\pi\ C1R1} \text{ [Hz]}$$

(4) Insert the R3 in integrator.

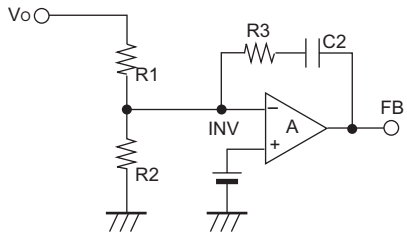

$$\text{Phase lead: } fz = \frac{1}{2\pi\ C2R3} \text{ [Hz]}$$

To cancel the LC resonance, the frequency to insert the phase lead should be set close to the LC resonant frequency. The settings above have are estimated. Consequently, the settings may be adjusted on the actual system. Furthermore, since these characteristics vary with the layout of PCB loading conditions, precise calculations should be made on the actual system.

3. For output capacitors having low ESR, such as low impedance electrolyte capacitor or OS-CON

In order to use capacitors with low ESR (i.e., several tens of mΩ), two phase-leads should be inserted so that a -180˚ phase-delay, due to LC resonance, will be compensated. The following section shows a typical phase compensation procedure.

(1) Phase compensation with secondary phase lead

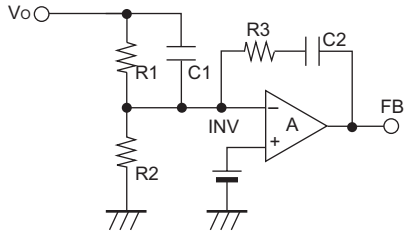

$$\text{Phase lead: } f_{Z1} = \frac{1}{2\pi\ R1C1} \text{ [Hz]}$$

$$\text{Phase lead: } f_{Z2} = \frac{1}{2\pi\ R3C2} \text{ [Hz]}$$

$$\text{LC resonant frequency: } fr = \frac{1}{2\pi\ \sqrt{LC}} \text{ [Hz]}$$

To set phase lead frequency, insert both of the phase leads close to the LC resonant frequency. According to empirical rule, setting the phase lead frequency f_{Z2} with R3 and C2 lower than the LC resonant frequency fr, and the phase lead frequency f_{Z1} with the R1 and C1 higher than the LC resonant frequency fr, will provide stable application conditions.

© 2010 ROHM Co., Ltd. All rights reserved.

Downloaded from Arrow.com.

<Reference> Measurement of open loop of DC/DC converter

To measure the open loop of DC/DC converter, use the gain phase analyzer or FRA to measure the frequency characteristics.

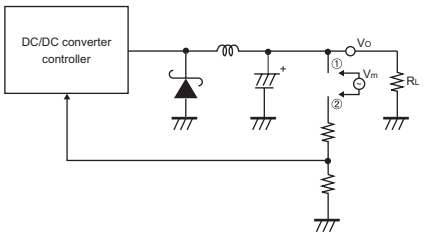

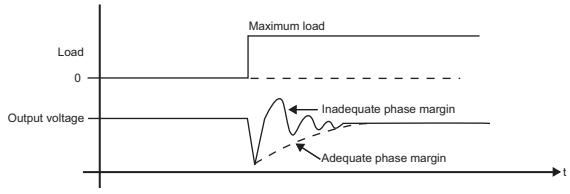

<Procedure>

1. Check to ensure output causes no oscillation at the maximum load in closed loop.
2. Isolate (1) and (2) and insert Vm (with amplitude of approximately 100 mVpp).
3. Measure (probe) the oscillation of (1) to that of (2).

Furthermore, the phase margin can also be measured with the load responsiveness.
Measure variations in the output voltage when instantaneously changing the load from no load to the maximum load.
Even though ringing phenomenon is caused, due to low phase margin, no ringing takes place. Phase margin is provided. However, no specific phase margin can be probed.

● Heat loss

For thermal design, be sure to operate the IC within the following conditions.
(Since the temperatures described hereunder are all guaranteed temperatures, take margin into account.)

1. The ambient temperature Ta is to be 125ºC or less.
2. The chip junction temperature Tj is to be 150ºC or less.

The chip junction temperature Tj can be considered in the following two patterns:

To obtain Tj from the IC surface temperature Tc in the actual use state,
$Tj = Tc + \theta j\text{-}c \times W$

<Reference value> θj-c : HRP7 7 ºC/W
SOP8 32.5 ºC/W

To obtain Tj from the ambient temperature Ta
$Tj = Ta + \theta j\text{-}a \times W$

<Reference value> θj-a : HRP7 89.3 °C/W Single piece of IC
54.3 °C/W 2-layer PCB (Copper foil area on the front side of PCB: 15 × 15 mm²)
22.7 °C/W 2-layer PCB (Copper foil area on the front side of PCB: 70 × 70 mm²)
PCB size: 70 × 70 × 1.6 mm³ (PCB incorporates thermal via.)
Copper foil area on the front side of PCB: 10.5 × 10.5 mm²
SOP8 222.2 °C/W Single piece of IC
181.8 °C/W 1-layer PCB
PCB size: 70 × 70 × 1.6 mm³

The heat loss W of the IC can be obtained by the formula shown below:

$$W = Ron \times Io^2 \times \frac{Vo}{VIN} + VIN \times Icc + Tr \times VIN \times Io \times f$$

Ron: ON resistance of IC (refer to pages 4 and 5.) Io: Load current Vo: Output voltage
VIN: Input voltage Icc: Circuit current (Refer to pages 2 and 3)
Tr: Switching rise/fall time (Approximately 40 nsec)
f : Oscillation frequency

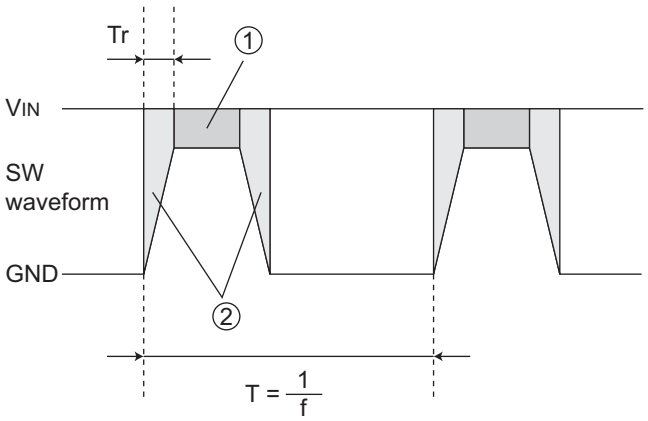

① $Ron \times Io^2$

② $2 \times \frac{1}{2} \times Tr \times \frac{1}{T} \times VIN \times Io$

$= Tr \times VIN \times Io \times f$

© 2010 ROHM Co., Ltd. All rights reserved.

Downloaded from Arrow.com.

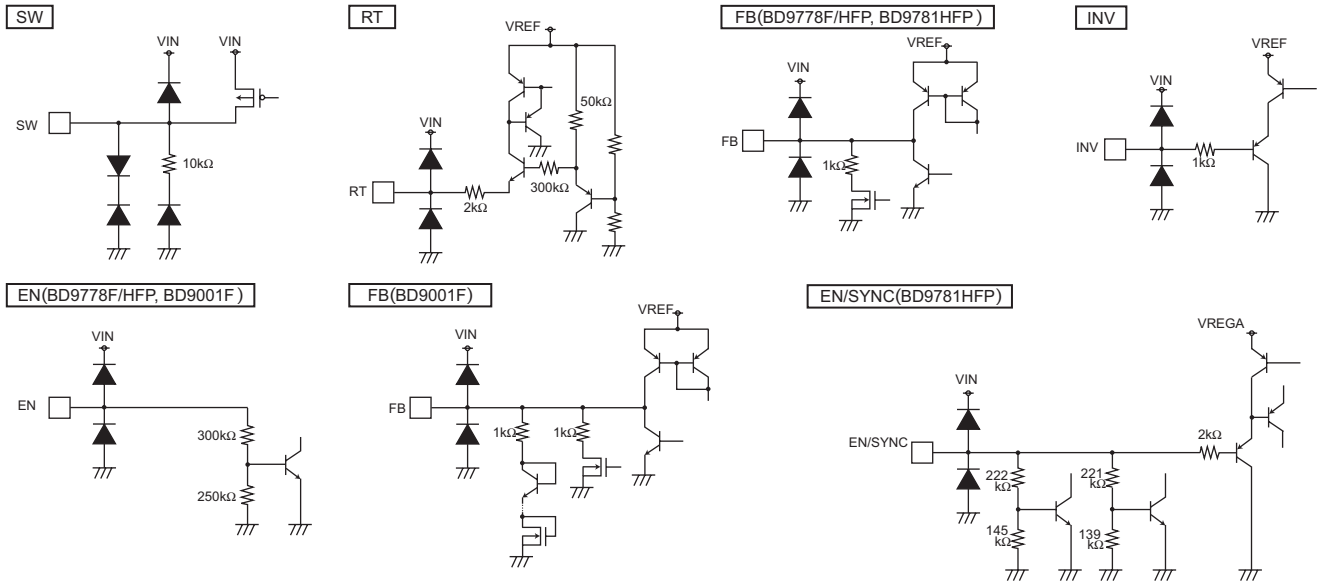

Fig.36 Equivalent circuit

● Notes for use

1) Absolute maximum ratings

An excess in the absolute maximum ratings, such as supply voltage, temperature range of operating conditions, etc., can break down the devices, thus making impossible to identify breaking mode, such as a short circuit or an open circuit. If any over rated values will expect to exceed the absolute maximum ratings, consider adding circuit protection devices, such as fuses. Furthermore, don't turn on the IC with a fast rising edge of V_{IN}. (rise time << 10V / μsec)

2) GND potential

GND potential should maintain at the minimum ground voltage level. Furthermore, no terminals should be lower than the GND potential voltage including an electric transients.

3) Thermal design

Use a thermal design that allows for a sufficient margin in light of the power dissipation (Pd) in actual operating conditions.

4) Inter-pin shorts and mounting errors

Use caution when positioning the IC for mounting on printed circuit boards. The IC may be damaged if there is any connection error or if positive and ground power supply terminals are reversed. The IC may also be damaged if pins are shorted together or are shorted to other circuits power lines.

5) Operation in strong electromagnetic field

Use caution when using the IC in the presence of a strong electromagnetic field as doing so may cause the IC to malfunction.

6) Inspection with set printed circuit board

When testing the IC on an application board, connecting a capacitor to a pin with low impedance subjects the IC to stress. Always discharge capacitors after each process or step. Always turn the IC's power supply off before connecting it to, or removing it from a jig or fixture, during the inspection process. Ground the IC during assembly steps as an antistatic measure. Use similar precaution when transporting and storing the IC.

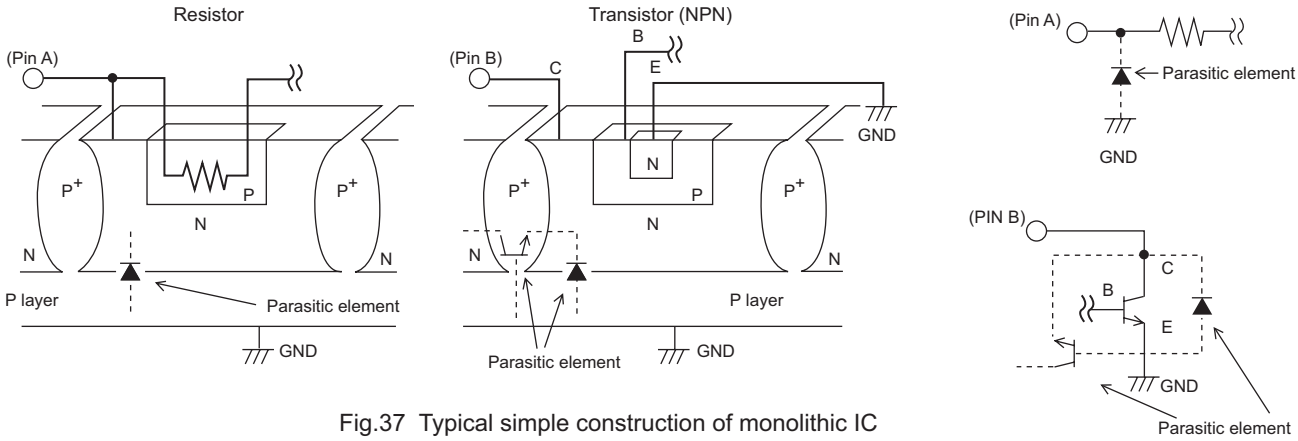

Fig.37 Typical simple construction of monolithic IC

© 2010 ROHM Co., Ltd. All rights reserved.

Downloaded from Arrow.com.

7) IC pin input (Fig. 37)
This monolithic IC contains P+ isolation and P substrate layers between adjacent elements to keep them isolated. P-N junctions are formed at the intersection of these P layers with the N layers of other elements, creating a parasitic diode or transistor. For example, the relation between each potential is as follows:
When GND > Pin A and GND > Pin B, the P-N junction operates as a parasitic diode.
When Pin B > GND > Pin A, the P-N junction operates as a parasitic transistor. Parasitic diodes can occur inevitably in the structure of the IC. The operation of parasitic diodes can result in mutual interference among circuits, operational faults, or physical damage. Accordingly, methods by which parasitic diodes operate, such as applying a voltage that is lower than the GND (P substrate) voltage toan input pin, should not be used.

8) Ground wiring pattern
It is recommended to separate the large-current GND pattern from the small-signal GND pattern and establish a single ground at the reference point of the set PCB, so that resistance to the wiring pattern and voltage fluctuations due to a large current will cause no fluctuations in voltages of the small-signal GND. Prevent fluctuations in the GND wiring pattern of external parts.

9) Temperature protection (thermal shut down) circuit
This IC has a built-in temperature protection circuit to prevent the thermal destruction of the IC. As described above, be sure to use this IC within the power dissipation range. Should a condition exceeding the power dissipation range continue, the chip temperature Tj will rise to activate the temperature protection circuit, thus turning OFF the output power element. Then, when the tip temperature Tj falls, the circuit will be automatically reset. Furthermore, if the temperature protection circuit is activated under the condition exceeding the absolute maximum ratings, do not attempt to use the temperature protection circuit for set design.

10) On the application shown below, if there is a mode in which VIN and each pin potential are inverted, for example, if the VIN is short-circuited to the Ground with external diode charged, internal circuits may be damaged. To avoid damage, it is recommended to insert a backflow prevention diode in the series with VIN or a bypass diode between each pin and VIN.

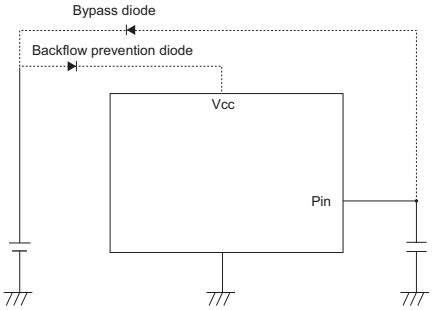

Fig.35

● Thermal derating characteristics

HRP7

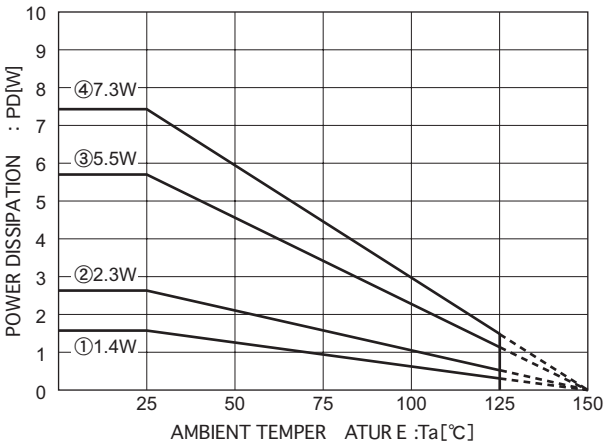

① Single piece of IC
PCB size: 70 x 70 x 1.6 mm^3 (PCB incorporates thermal via.)
Copper foil area on the front side of PCB: 10.5 x 10.5 mm2
② 2-layer PCB (Copper foil area on the reverse side of PCB: 15 x 15 mm^2)
③ 2-layer PCB (Copper foil area on the reverse side of PCB: 70 x 70 mm^2)
④ 4-layer PCB (Copper foil area on the reverse side of PCB: 70 x 70 mm^2)

Fig.39

SOP8

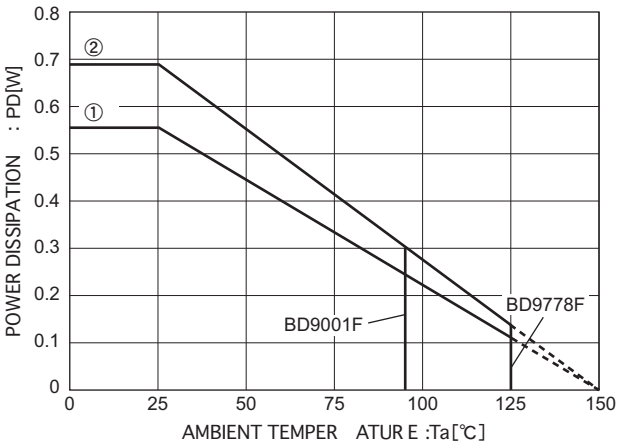

① Single piece of IC
② When mounted on ROHM standard PCB
(Glass epoxy PCB of 70 mm x 70 mm x 1.6 mm)

Fig.40

© 2010 ROHM Co., Ltd. All rights reserved.

Downloaded from Arrow.com.

● Selection of order type

B	D	9	7	7	8	H	F	P	-	T	R

Part No.

Part No.
9778 = 36V/2A
9781 = 36V/4A
9001 = 50V/2A

Package
F = SOP8
HFP = HRP7

Taping type
E2 = Reel-type embossed carrier tape (SOP8)
TR = Reel-type embossed carrier tape (HRP7)

SOP8

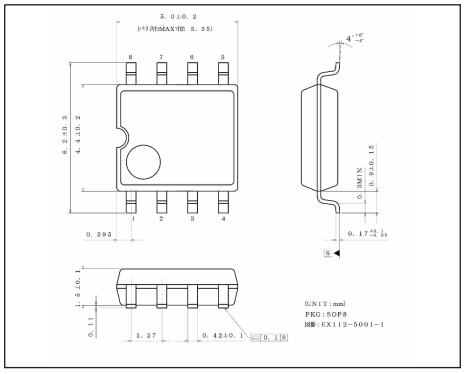

<Tape and Reel information>

Tape	Embossed carrier tape
Quantity	2500pcs
Direction of feed	E2 (The direction is the 1pin of product is at the upper left when you hold reel on the left hand and you pull out the tape on the right hand)

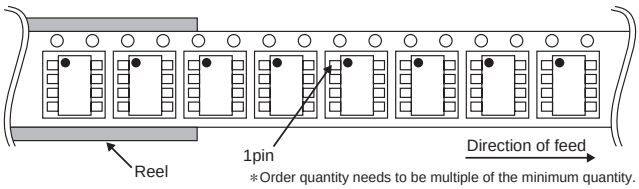

∗Order quantity needs to be multiple of the minimum quantity.

HRP7

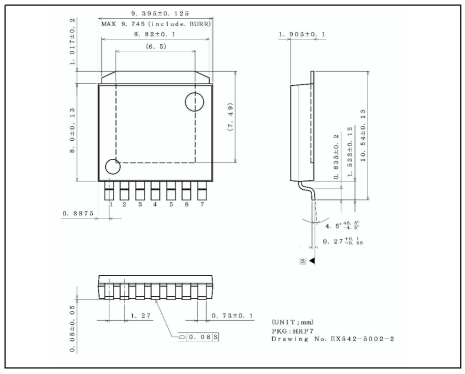

<Tape and Reel information>

Tape	Embossed carrier tape
Quantity	2000pcs
Direction of feed	TR (The direction is the 1pin of product is at the upper right when you hold reel on the left hand and you pull out the tape on the right hand)

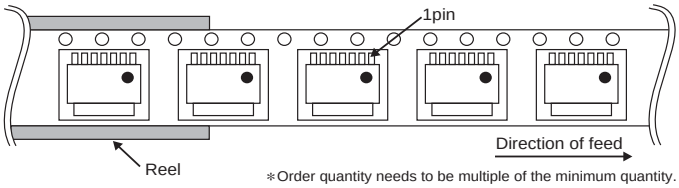

∗Order quantity needs to be multiple of the minimum quantity.

© 2010 ROHM Co., Ltd. All rights reserved.

Downloaded from Arrow.com.

Notice

Precaution on using ROHM Products

1. If you intend to use our Products in devices requiring extremely high reliability (such as medical equipment (Note 1), aircraft/spacecraft, nuclear power controllers, etc.) and whose malfunction or failure may cause loss of human life, bodily injury or serious damage to property ("Specific Applications"), please consult with the ROHM sales representative in advance. Unless otherwise agreed in writing by ROHM in advance, ROHM shall not be in any way responsible or liable for any damages, expenses or losses incurred by you or third parties arising from the use of any ROHM's Products for Specific Applications.

(Note1) Medical Equipment Classification of the Specific Applications

JAPAN	USA	EU	CHINA
CLASSⅢ	CLASSⅢ	CLASSⅡb	CLASSⅢ
CLASSⅣ		CLASSⅢ	

2. ROHM designs and manufactures its Products subject to strict quality control system. However, semiconductor products can fail or malfunction at a certain rate. Please be sure to implement, at your own responsibilities, adequate safety measures including but not limited to fail-safe design against the physical injury, damage to any property, which a failure or malfunction of our Products may cause. The following are examples of safety measures:
   [a] Installation of protection circuits or other protective devices to improve system safety
   [b] Installation of redundant circuits to reduce the impact of single or multiple circuit failure

3. Our Products are not designed under any special or extraordinary environments or conditions, as exemplified below. Accordingly, ROHM shall not be in any way responsible or liable for any damages, expenses or losses arising from the use of any ROHM's Products under any special or extraordinary environments or conditions. If you intend to use our Products under any special or extraordinary environments or conditions (as exemplified below), your independent verification and confirmation of product performance, reliability, etc, prior to use, must be necessary:
   [a] Use of our Products in any types of liquid, including water, oils, chemicals, and organic solvents
   [b] Use of our Products outdoors or in places where the Products are exposed to direct sunlight or dust
   [c] Use of our Products in places where the Products are exposed to sea wind or corrosive gases, including Cl_2, H_2S, NH_3, SO_2, and NO_2
   [d] Use of our Products in places where the Products are exposed to static electricity or electromagnetic waves
   [e] Use of our Products in proximity to heat-producing components, plastic cords, or other flammable items
   [f] Sealing or coating our Products with resin or other coating materials
   [g] Use of our Products without cleaning residue of flux (even if you use no-clean type fluxes, cleaning residue of flux is recommended); or Washing our Products by using water or water-soluble cleaning agents for cleaning residue after soldering
   [h] Use of the Products in places subject to dew condensation

4. The Products are not subject to radiation-proof design.

5. Please verify and confirm characteristics of the final or mounted products in using the Products.

6. In particular, if a transient load (a large amount of load applied in a short period of time, such as pulse. is applied, confirmation of performance characteristics after on-board mounting is strongly recommended. Avoid applying power exceeding normal rated power; exceeding the power rating under steady-state loading condition may negatively affect product performance and reliability.

7. De-rate Power Dissipation depending on ambient temperature. When used in sealed area, confirm that it is the use in the range that does not exceed the maximum junction temperature.

8. Confirm that operation temperature is within the specified range described in the product specification.

9. ROHM shall not be in any way responsible or liable for failure induced under deviant condition from what is defined in this document.

Precaution for Mounting / Circuit board design

1. When a highly active halogenous (chlorine, bromine, etc.) flux is used, the residue of flux may negatively affect product performance and reliability.

2. In principle, the reflow soldering method must be used on a surface-mount products, the flow soldering method must be used on a through hole mount products. If the flow soldering method is preferred on a surface-mount products, please consult with the ROHM representative in advance.

For details, please refer to ROHM Mounting specification

© 2015 ROHM Co., Ltd. All rights reserved.

Downloaded from Arrow.com.

Precautions Regarding Application Examples and External Circuits

1. If change is made to the constant of an external circuit, please allow a sufficient margin considering variations of the characteristics of the Products and external components, including transient characteristics, as well as static characteristics.

2. You agree that application notes, reference designs, and associated data and information contained in this document are presented only as guidance for Products use. Therefore, in case you use such information, you are solely responsible for it and you must exercise your own independent verification and judgment in the use of such information contained in this document. ROHM shall not be in any way responsible or liable for any damages, expenses or losses incurred by you or third parties arising from the use of such information.

Precaution for Electrostatic

This Product is electrostatic sensitive product, which may be damaged due to electrostatic discharge. Please take proper caution in your manufacturing process and storage so that voltage exceeding the Products maximum rating will not be applied to Products. Please take special care under dry condition (e.g. Grounding of human body / equipment / solder iron, isolation from charged objects, setting of Ionizer, friction prevention and temperature / humidity control).

Precaution for Storage / Transportation

1. Product performance and soldered connections may deteriorate if the Products are stored in the places where:
   [a] the Products are exposed to sea winds or corrosive gases, including Cl2, H2S, NH3, SO2, and NO2
   [b] the temperature or humidity exceeds those recommended by ROHM
   [c] the Products are exposed to direct sunshine or condensation
   [d] the Products are exposed to high Electrostatic

2. Even under ROHM recommended storage condition, solderability of products out of recommended storage time period may be degraded. It is strongly recommended to confirm solderability before using Products of which storage time is exceeding the recommended storage time period.

3. Store / transport cartons in the correct direction, which is indicated on a carton with a symbol. Otherwise bent leads may occur due to excessive stress applied when dropping of a carton.

4. Use Products within the specified time after opening a humidity barrier bag. Baking is required before using Products of which storage time is exceeding the recommended storage time period.

Precaution for Product Label

QR code printed on ROHM Products label is for ROHM's internal use only.

Precaution for Disposition

When disposing Products please dispose them properly using an authorized industry waste company.

Precaution for Foreign Exchange and Foreign Trade act

Since concerned goods are fallen under listed items of export control prescribed by Foreign exchange and Foreign trade act, the permission based on the act is necessary in case of export.

Precaution Regarding Intellectual Property Rights

1. All information and data including but not limited to application example contained in this document is for reference only. ROHM does not warrant that foregoing information or data will not infringe any intellectual property rights or any other rights of any third party regarding such information or data.

2. ROHM shall not have any obligations where the claims, actions or demands arising from the combination of the Products with other articles such as components, circuits, systems or external equipment (including software).

3. No license, expressly or implied, is granted hereby under any intellectual property rights or other rights of ROHM or any third parties with respect to the Products or the information contained in this document. Provided, however, that ROHM will not assert its intellectual property rights or other rights against you or your customers to the extent necessary to manufacture or sell products containing the Products, subject to the terms and conditions herein.

Other Precaution

1. This document may not be reprinted or reproduced, in whole or in part, without prior written consent of ROHM.

2. The Products may not be disassembled, converted, modified, reproduced or otherwise changed without prior written consent of ROHM.

3. In no event shall you use in any way whatsoever the Products and the related technical information contained in the Products or this document for any military purposes, including but not limited to, the development of mass-destruction weapons.

4. The proper names of companies or products described in this document are trademarks or registered trademarks of ROHM, its affiliated companies or third parties.

© 2015 ROHM Co., Ltd. All rights reserved.

Downloaded from Arrow.com.

General Precaution

1. Before you use our Products, you are requested to carefully read this document and fully understand its contents. ROHM shall not be in any way responsible or liable for failure, malfunction or accident arising from the use of any ROHM's Products against warning, caution or note contained in this document.

2. All information contained in this document is current as of the issuing date and subject to change without any prior notice. Before purchasing or using ROHM's Products, please confirm the latest information with a ROHM sales representative.

3. The information contained in this document is provided on an "as is" basis and ROHM does not warrant that all information contained in this document is accurate and/or error-free. ROHM shall not be in any way responsible or liable for any damages, expenses or losses incurred by you or third parties resulting from inaccuracy or errors of or concerning such information.

© 2015 ROHM Co., Ltd. All rights reserved.

Downloaded from Arrow.com.